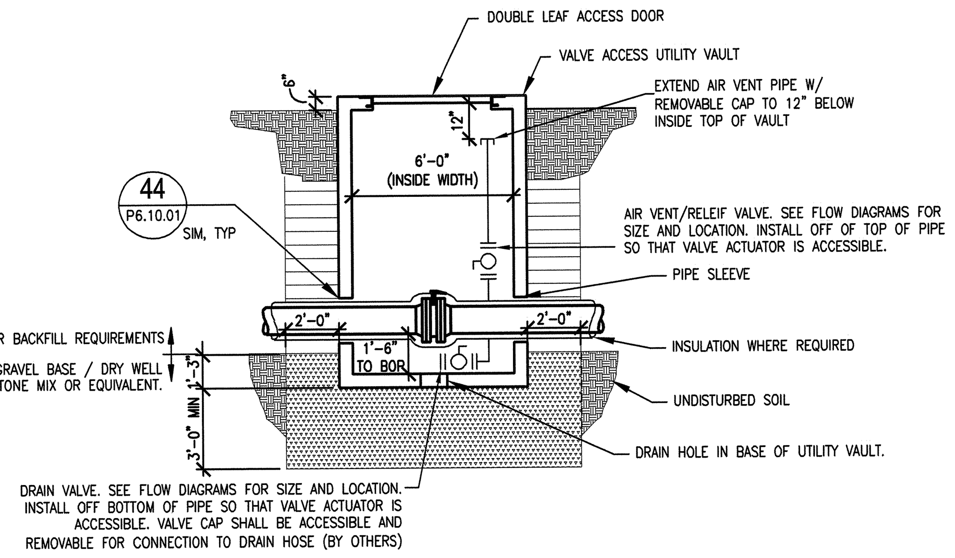

6 – VALVE ACCESS UTILITY VAULT INSTALLATION
SCALE: 1/4"=1'-0" UHDT15114-1

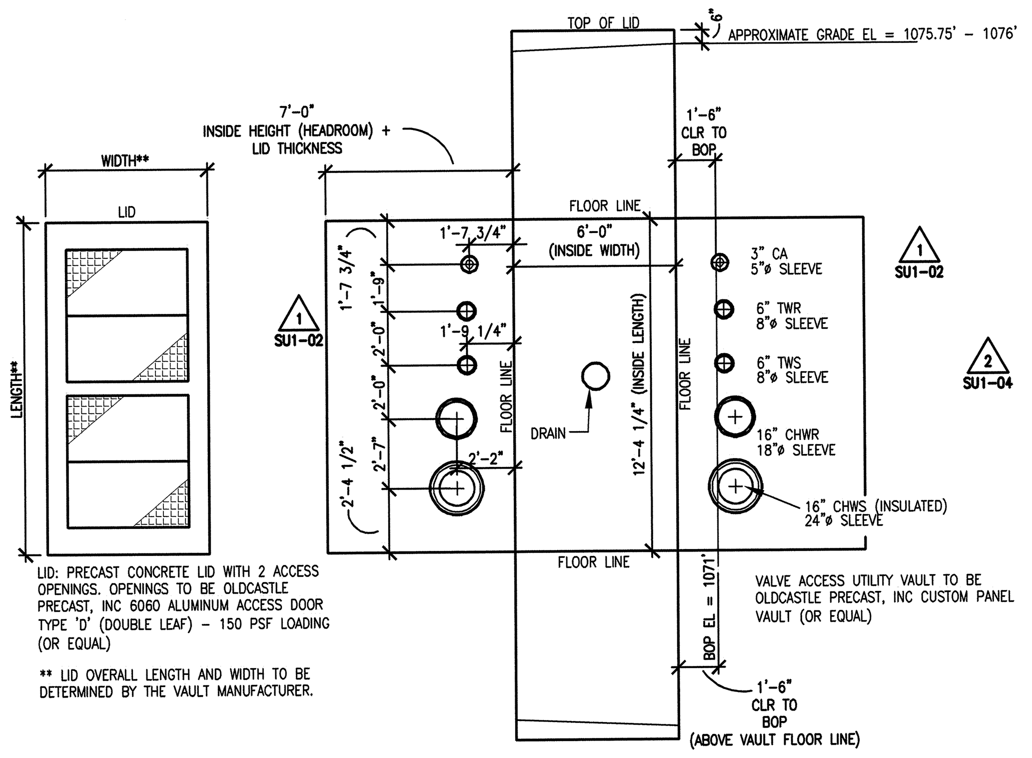

-FOLD OUT-
3 – VALVE ACCESS UTILITY VAULT FOLD OUT FOR ISOLATION TOWARDS CLO
SCALE: 1/4"=1'-0" UHDT15114-1
** UHU2.61.G4, UHU4.61.06

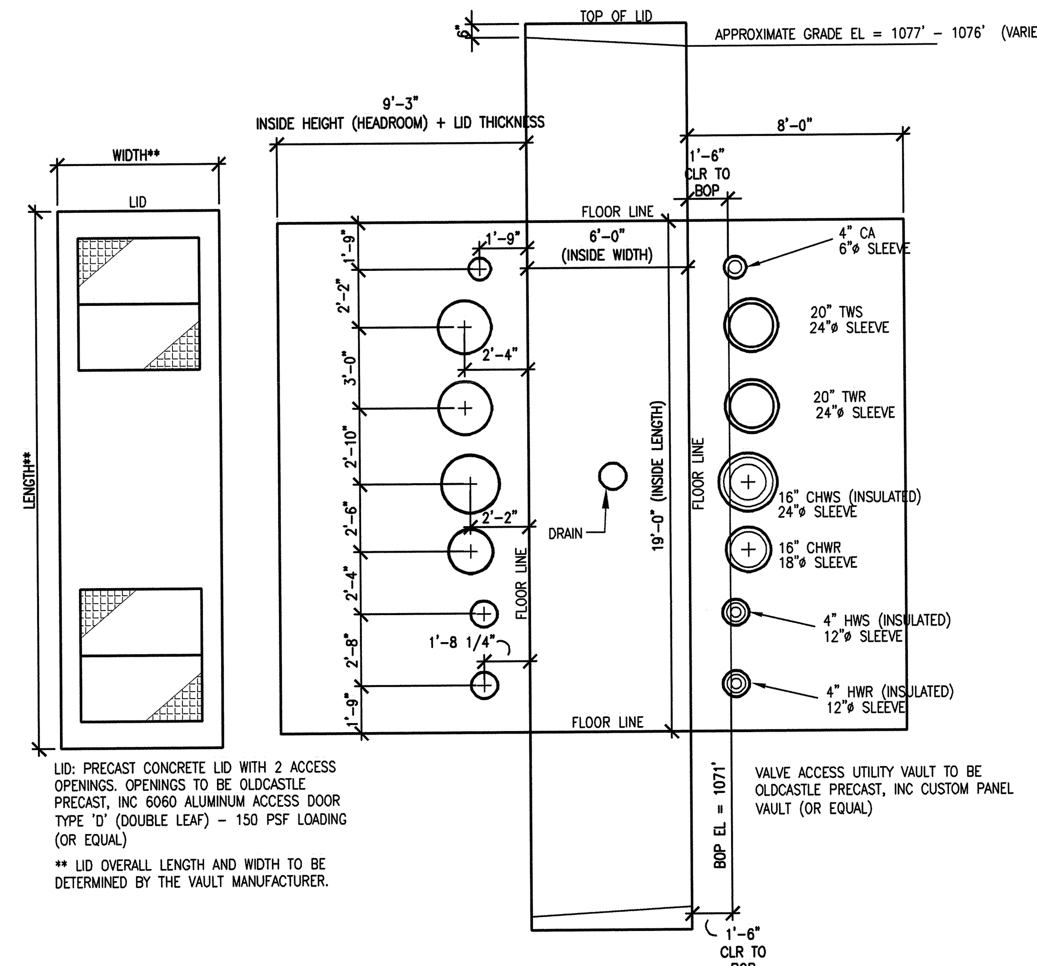

-FOLD OUT-
1 – VALVE ACCESS UTILITY VAULT FOLD OUT FOR ISOLATION TOWARDS KLYSTRON
SCALE: 1/4"=1'-0" UHDT15114-1
** UHU2.61.G4, UHU4.61.04

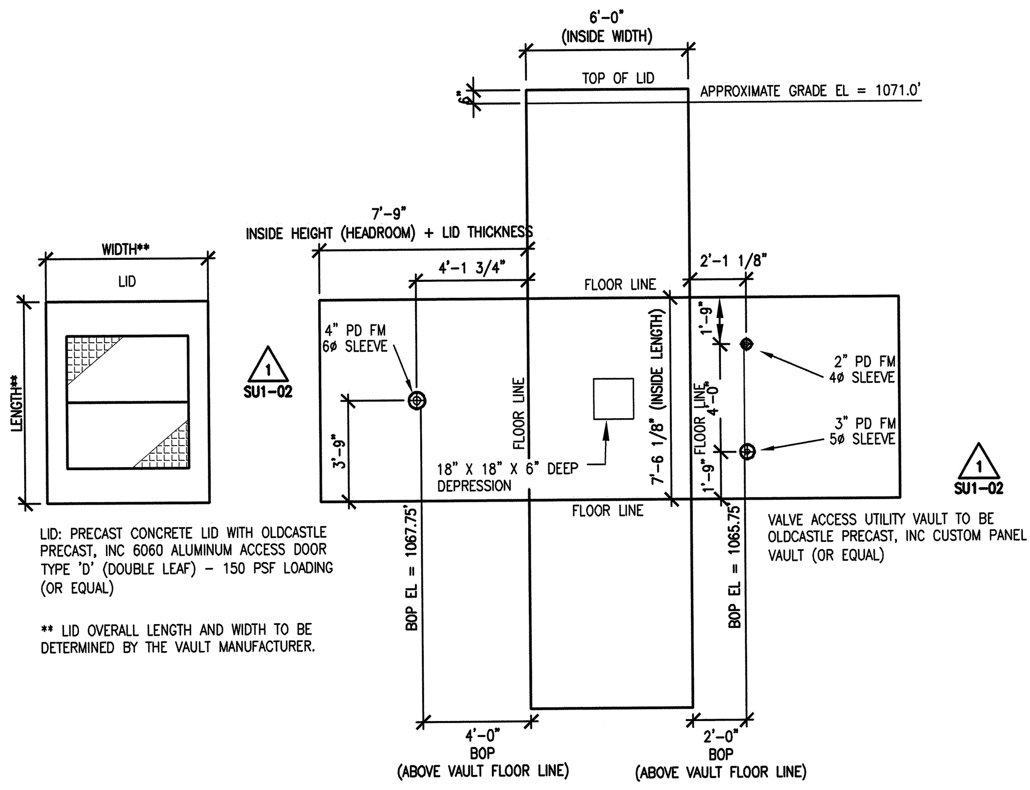

-FOLD OUT-
4 – VALVE ACCESS UTILITY VAULT FOR PD MANIFOLD SOUTH OF TARGET BUILDING
UHU2.61.H5 SCALE: 1/4"=1'-0" UHDT15116-1

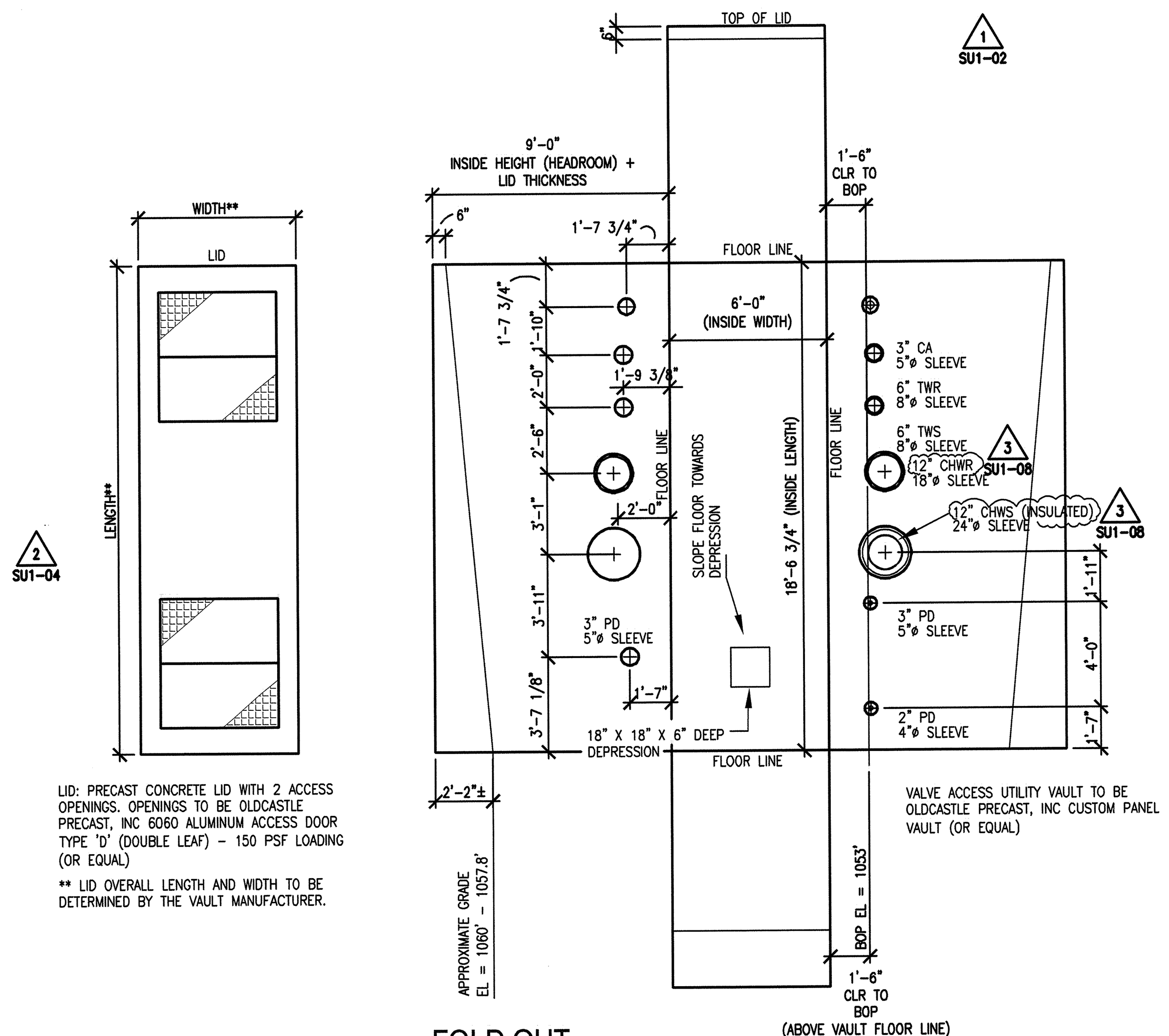

-FOLD OUT-
7 – VALVE ACCESS UTILITY VAULT FOLD OUT FOR ISOLATION TOWARDS CLO
SCALE: 1/4"=1'-0" UHDT15114-1
** UHU2.61.H5

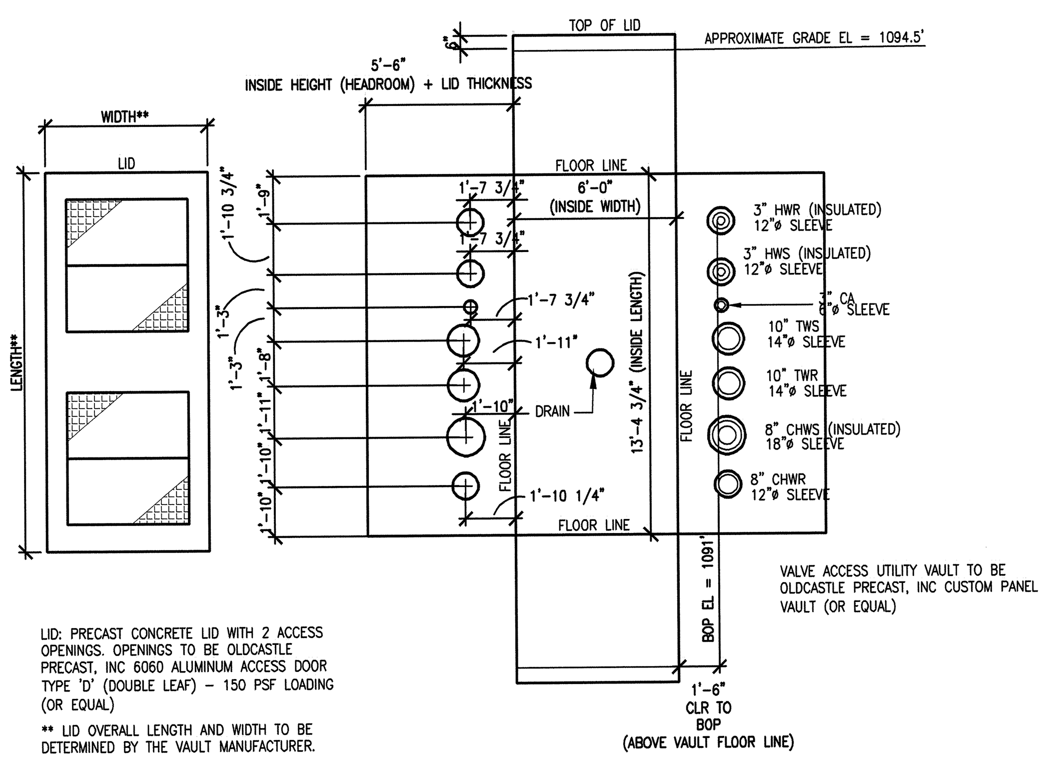

-FOLD OUT-
5 – VALVE ACCESS UTILITY VAULT FOLD OUT FOR ISOLATION TOWARDS RING SERVICE BUILDING
SCALE: 1/4"=1'-0" UHDT15114-1
** UHU2.61.G4, UHU4.61.09

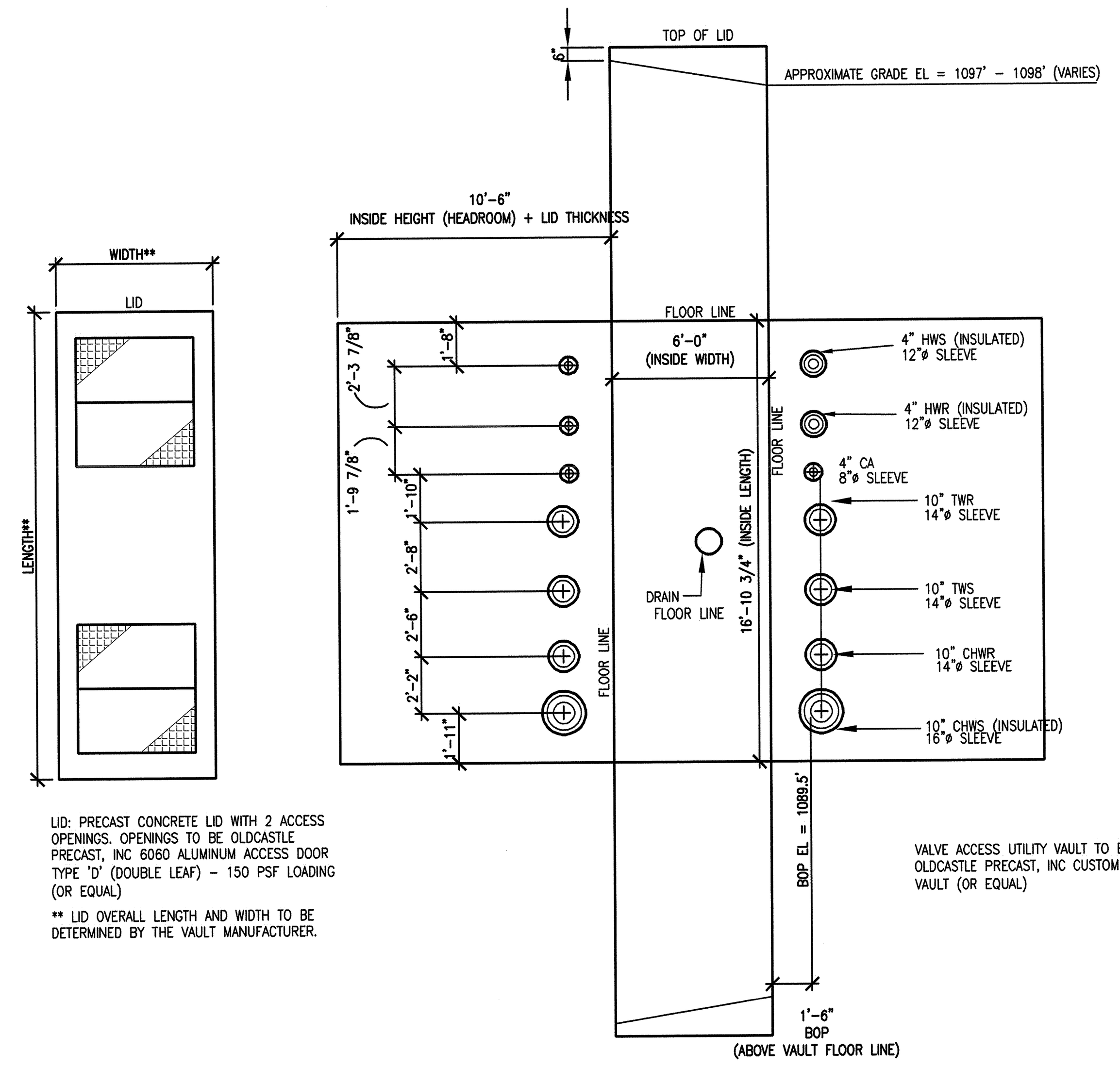

-FOLD OUT-
2 – VALVE ACCESS UTILITY VAULT FOLD OUT FOR ISOLATION TOWARDS TARGET BUILDING
SCALE: 1/4"=1'-0" UHDT15114-1
** UHU2.61.G4, UHU4.61.01

NO REPRESENTATION OR WARRANTY, EXPRESSED OR IMPLIED, IS MADE AS TO THE ACCURACY, COMPLETENESS OR USEFULNESS OF THE INFORMATION OR STATEMENTS CONTAINED IN THESE DRAWINGS, OR THAT THE USE OR DISCLOSURE OF ANY INFORMATION, APPARATUS, METHOD, OR PROCESS DISCLOSED IN THESE DRAWINGS MAY NOT INFRINGE PRIVATE RIGHTS OF OTHERS. NO LIABILITY IS ASSUMED WITH RESPECT TO THE USE OF, OR FOR DAMAGES RESULTING FROM THE USE OF ANY INFORMATION, APPARATUS, METHOD, OR PROCESS DISCLOSED IN THESE DRAWINGS. DRAWINGS MADE AVAILABLE FOR INFORMATION TO BIDDER ARE NOT TO BE USED FOR OTHER PURPOSES AND ARE TO BE RETURNED UPON REQUEST OF THE FORWARDING CONTRACTOR.

SECTION AND DETAIL KEY: NUMBER OF SECTION OR DETAIL / DRAWING ON WHICH SECTION OR DETAIL IS SHOWN OR TAKEN

THIS DOCUMENT CONTROLLED BY
CHANGE CONTROL SYSTEM ____
ENGINEERING PROCEDURE ____

REV	CHANGE TYPE	CHANGE CONTROL SYSTEM	CHANGE REQUEST NUMBER	DESCRIPTION	DSN	CHK	DEPT	DATE	PE	DATE	PJ	DATE	REQ	DATE	UTB	DATE	RPE	RPE NO	DATE	ST	CV	EC	EE	EM	IE	M	PD	SE	AR
3	A	4	8	CNMS REVISIONS – DCN T1-SU1-08 – 12/09/02	CF	JW			[illegible]	1/03	[illegible]	1/03	[illegible]	1/24/03			BWJ	105869	12/9/02	--	BN	--	VS	--	--	--	JW	--	--
2	A	4	4	LAND IMPROVEMENTS REVISIONS – 2/8/2002	CF	JW											BWJ	105869	2/8/02	RW	BN	--	AK	--	BJ	--	JH	--	WS
1	A	4	2	BASIS OF AWARD – 10/30/2001	PCG	JW			CG	11/15/01	TM	11/15/01			JL	11/15/01	BWJ	105869	10/30/01	RW	AW	BS	AK	BS	BJ	--	BS	--	WS
0				CERTIFIED FOR CONSTRUCTION – 7/13/01	CF	BS			JS	7/16/01	TM	7/16/01			JL	7/16/01	BWJ	105869	7/13/01	RW	AW	BS	AK	BS	BJ	--	BS	--	WS

REVISION OR ISSUE PURPOSE — REVISION APPROVALS — SQUAD CHECK

RPE: BRUCE W. JOHNSON, REGISTERED ENGINEER, AGRICULTURE COMMERCE, No. 00105869, STATE OF TENNESSEE
REV. 3 DATE 12/9/02

DSN	C. FILLER	7/13/01
DRW	C. FILLER	7/13/01
CHK	B. JOHNSON	7/13/01
DEPT		
PE	JB SCHUBERT	7/16/01
PJ	T.McLAUGHLIN	7/16/01
REQ		
UTB	J.LAWSON	7/16/01

DRAWING APPROVALS

108040000-U8E-8000-A057

Knight/Jacobs Joint Venture, 701 Scarboro Road, MS 8253, Oak Ridge, TN 37830, 865-241-9433, fax 865-241-3400
KNIGHT – Knight Advanced Technology, 4710 E. Elwood, Bldg. 1, #9, Phoenix, AZ 85040

UT-BATTELLE — Oak Ridge National Laboratory, managed for the DEPARTMENT OF ENERGY under U.S. GOVERNMENT contract DE-AC05-00OR22725, UT-BATTELLE, LLC, Oak Ridge, Tennessee

PROJECT NAME: SPALLATION NEUTRON SOURCE

SITE UTILITIES MECHANICAL DETAILS SHEET 4

1	48	49	50	PLANT	BLDG	FL	SH.	OF	TYPE	CLASS
3	U	X	X	8	8000		1	1	S	U

51	52	53	WBS		REV
NC	NA		1.8.4	UHU6.61.04	3