GENERAL NOTES:

1. CONTRACTOR SHALL MAKE NO SPLICES IN THE MANHOLE UNLESS NOTED OTHERWISE.

KEYED NOTES:

1. DOUBLE FEED COMING OUT OF THE SWITCH GEAR, 24W GOING TO RF-PS1 AND 24E GOING TO HEBT ME9 AND CONTINUING.
2. T-SPLICE IN MANHOLE M20.
3. T-SPLICE IN MANHOLE M20.(FUTURE)
4. 300kVA TRANSFORMER PART OF THIS PACKAGE.

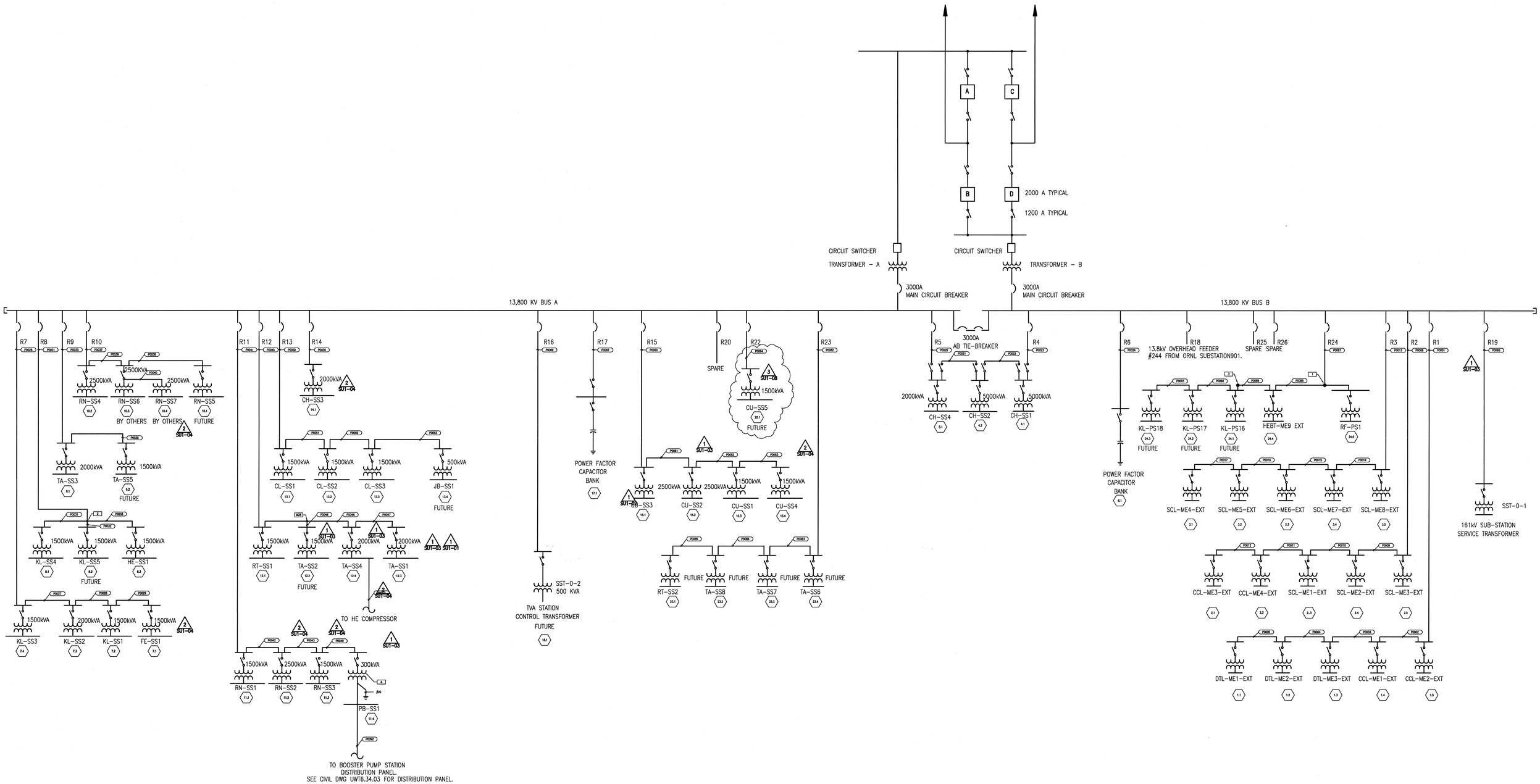

NO REPRESENTATION OR WARRANTY, EXPRESSED OR IMPLIED, IS MADE AS TO THE ACCURACY, COMPLETENESS OR USEFULNESS OF THE INFORMATION OR STATEMENTS CONTAINED IN THESE DRAWINGS, OR THAT THE USE OR DISCLOSURE OF ANY INFORMATION, APPARATUS, METHOD, OR PROCESS DISCLOSED IN THESE DRAWINGS MAY NOT INFRINGE PRIVATE RIGHTS OF OTHERS. NO LIABILITY IS ASSUMED WITH RESPECT TO THE USE OF, OR FOR DAMAGES RESULTING FROM THE USE OF ANY INFORMATION, APPARATUS, METHOD, OR PROCESS DISCLOSED IN THESE DRAWINGS. DRAWINGS MADE AVAILABLE FOR INFORMATION TO BIDDER ARE NOT TO BE USED FOR OTHER PURPOSES AND ARE TO BE RETURNED UPON REQUEST OF THE FORWARDING CONTRACTOR.

NUMBER OF SECTION OR DETAIL

DRAWING ON WHICH SECTION OR DETAIL IS SHOWN OR TAKEN

SECTION AND DETAIL KEY

THIS DOCUMENT CONTROLLED BY

CHANGE CONTROL SYSTEM _____

ENGINEERING PROCEDURE _____

REV	CHANGE TYPE	CHANGE CONTROL SYSTEM	CHANGE CONTROL NUMBER	DESCRIPTION	DSN	CHK	DEPT	DATE	PE	DATE	PJ	DATE	REQ	DATE	UTB	DATE	RPE	RPE NO	DATE	ST	CV	EC	EE	EM	IE	M	PD	SE	AR
3	A	4	6,8	CNMS REVISIONS – DCN T1–SU1–08 – 12/09/02	DD	VS											VGS	106009	12/09/02	RW	–	–	VS	–	–	–	JW	–	TW
2	A	4	4	LAND IMPROVEMENT REVISIONS – 2/8/02	PD	PD			CLG	2/02	TMC	2/14/02					VGS	106009	02/08/02	RW	BN	––	AK	––	BJ	––	JH	––	WS
1	A	4	1–3	BASIS OF AWARD – 10/30/2001	PD	PD			CLG	11/15/01	TMC	11/15/01			JRL	11/15/01	VGS	106009	10/30/01	RW	AW	BS	AK	BS	BJ	––	BS	––	WS
0				CERTIFIED FOR CONSTRUCTION – 7/13/2001	AS	AK			JS	7/16/01	TM	7/16/01			JL	7/16/01	VGS	106009	07/13/01	RW	AW	BS	AK	BS	BJ	––	BS	––	WS

REVISION OR ISSUE PURPOSE — REVISION APPROVALS — SQUAD CHECK

RPE VICTOR G. STREET, REGISTERED ENGINEER, No. 001000, STATE OF TENNESSEE, COMMONWEALTH — REV. 3 DATE 12/16/02

DSN	A. SANDHU	07/13/01
DRW	G.GARCIA	07/13/01
CHK	A.KANER	07/13/01
DEPT		
PE	J.SCHUBERT	07/16/01
PJ	T.McLAUCHLIN	07/16/01
REQ		
UTB	J.LAWSON	07/16/01

DRAWING APPROVALS

108040000-U8E-8000-A086

Knight/Jacobs

Knight/Jacobs Joint Venture
701 Scarboro Road, MS 8253
Oak Ridge, TN 37830
865-241-9433
fax 865-241-3400

KNIGHT
Knight Advanced Technology
4710 E. Elwood, Bldg 1, Jt
Phoenix, AZ 85040

UT-BATTELLE

Oak Ridge National Laboratory
managed for the DEPARTMENT OF ENERGY under
U.S. GOVERNMENT contract DE-AC05-00OR22725
UT-BATTELLE, LLC, • Oak Ridge, Tennessee

PROJECT NAME:
SPALLATION NEUTRON SOURCE

SITE UTILITIES
ELECTRICAL SINGLE LINE DIAGRAM

1	48	49	50	PLANT	BLDG	FL	SH.	OF	TYPE	CLASS
3	U	X	X	8	8000		1	1	D	U
51		52		53	WBS					REV
NC		NA			1.8.4		UEL7.61.01			3

AutoCAD

Date: 11/06/2001 Time: 11:01:39
Username: BRANDL
Path: J:\PLAN\PROJECTS\7600\700\CADD\W08_1\7600\700_CADD\W08_1\7600_700_CADD\W08_1\7401_PLT.DWG