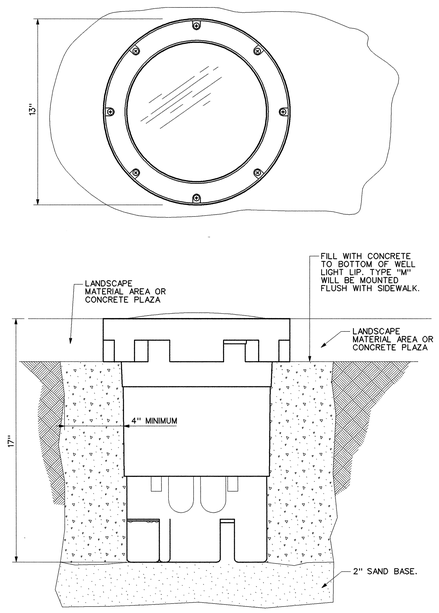

4 ULT6.49.01 TYPE "I4" WELL MOUNTED LIGHT FIXTURE DETAIL

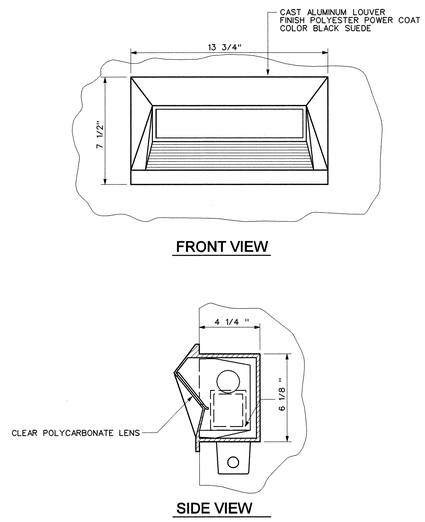

3 ULT6.49.01 TYPE "I1" RECESSED WALL LIGHT FIXTURE DETAIL

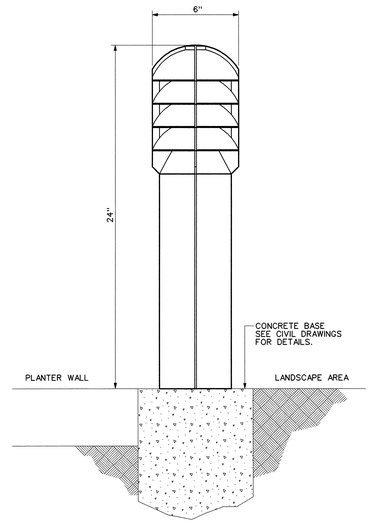

2 ULT6.49.01 TYPE "I2" PEDESTAL LIGHT FIXTURE DETAIL

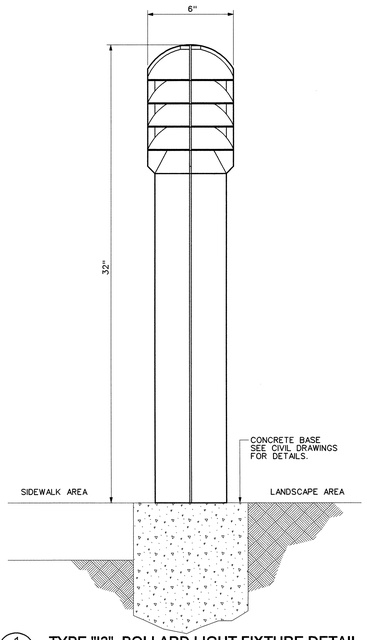

1 ULT6.49.01 TYPE "I3" BOLLARD LIGHT FIXTURE DETAIL

NO REPRESENTATION OR WARRANTY, EXPRESSED OR IMPLIED, IS MADE AS TO THE ACCURACY, COMPLETENESS OR USEFULNESS OF THE INFORMATION OR STATEMENTS CONTAINED IN THESE DRAWINGS, OR THAT THE USE OR DISCLOSURE OF ANY INFORMATION, APPARATUS, METHOD, OR PROCESS DISCLOSED IN THESE DRAWINGS MAY NOT INFRINGE PRIVATE RIGHTS OF OTHERS. NO LIABILITY IS ASSUMED WITH RESPECT TO THE USE OF, OR FOR DAMAGES RESULTING FROM THE USE OF ANY INFORMATION, APPARATUS, METHOD, OR PROCESS DISCLOSED IN THESE DRAWINGS. DRAWINGS MADE AVAILABLE FOR INFORMATION TO BIDDER ARE NOT TO BE USED FOR OTHER PURPOSES AND ARE TO BE RETURNED UPON REQUEST OF THE FORWARDING CONTRACTOR.

NUMBER OF SECTION OR DETAIL
DRAWING ON WHICH SECTION OR DETAIL IS SHOWN OR TAKEN
SECTION AND DETAIL KEY

THIS DOCUMENT CONTROLLED BY
CHANGE CONTROL SYSTEM _____
ENGINEERING PROCEDURE _____

REV	CHANGE TYPE	CHANGE CONTROL SYSTEM	CHANGE REQUEST NUMBER	DESCRIPTION	DSN	CHK	DEPT
0				CERTIFIED FOR CONSTRUCTION-12/9/2002	RBS	AW	

REVISION OR ISSUE PURPOSE

DATE	PE	DATE	PJ	DATE	REQ	DATE	UTB	DATE	RPE	RPE NO	DATE
1/03		1/13		1/13		1/13			RBS	17982	12/09

REVISION APPROVALS

ST	CV	EC	EE	EM	IE	M	PD	SE	AR
RZ	AW	BWJ	AK	IM	DM	–	BWJ	–	TW

SQUAD CHECK

RPE
ROBERT B. STEPHENS REGISTERED ARCHITECT No. 17982 STATE OF TENNESSEE
REV. 0 DATE 12-5-02

DSGN	R. STEPHENS	12/09/02
DRW	R. BOOKER	12/09/02
CHKR	A. WYLIE	12/09/02
SECT		
DEPT		
PE		1/2/03
PJ		1/2/03
REQ		12/9/02
UTB		

DRAWING APPROVALS

SCALE: 3" = 1'-0"

ORNL DRAWING NUMBER:

KnightJacobs Joint Venture
701 Scarboro Road, MS 8253
Oak Ridge, TN 37830

865-241-9433
fax 865-241-3400

BWSC Barge Waggoner Sumner & Cannon, Inc.
ENGINEERS ARCHITECTS PLANNERS LANDSCAPE ARCHITECTS AND SURVEYORS
555 Commerce Park Drive Suite 100, Oak Ridge, Tennessee 37830
Phone 865-48-0-96 Fax 865-48-0-300

UT-BATTELLE
Oak Ridge National Laboratory
managed for the DEPARTMENT OF ENERGY under U.S. GOVERNMENT contract DE-AC05-000R22725
UT-BATTELLE, LLC. • Oak Ridge, Tennessee

PROJECT NAME:
CENTER FOR NANOPHASE MATERIALS SCIENCES
LANDSCAPE LIGHTING DETAILS

1	48	49	50	PLANT	BLDG	FL	SH.	OF	TYPE	CLASS
3	U	X	X	8	8610	X	1	1	S	U
51		52		53						
NC		NA		IN						

A/E DRAWING NUMBER: DRAWING NUMBER ULT6.49.01 REV 0

05 DEC 2002 09:52:21
f:\sns\700_cadd\task_01\49\740_plot\ult6_49_01.dgn