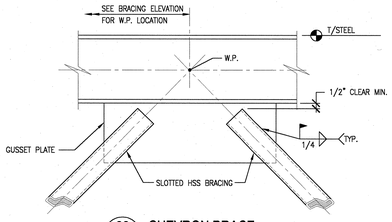

22 S5.20.40 **CHEVRON BRACE BRACING CONNECTION** SDT057000-8
SCALE : NONE

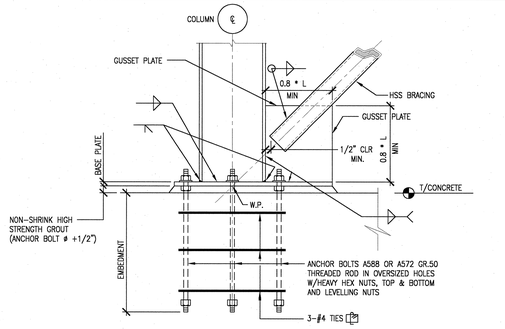

18 S5.20.40 SCALE : NONE **BRACING BASE PLATE CONNECTION TO COLUMN FLANGE** SDT057000-8

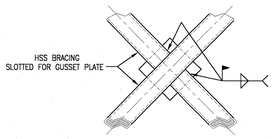

23 S5.20.40 SCALE : NONE **CROSS BRACE CONNECTION** SDT057000-8

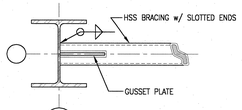

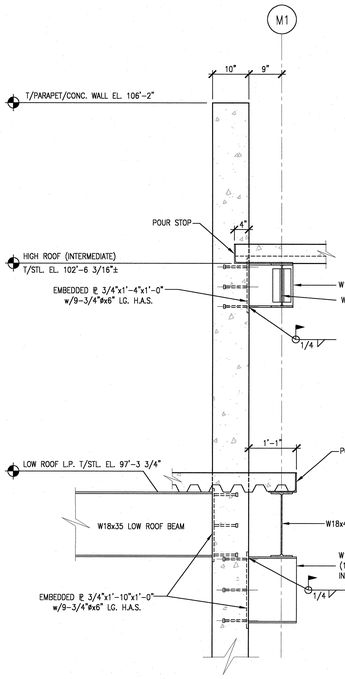

24 S2.01.67 SCALE: 3/4" = 1'-0" **BEAM BEARING DETAIL AT CONC. WALL** SDT057001-8

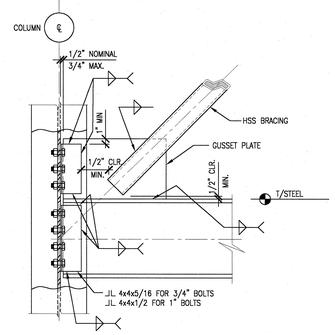

19 S5.20.40 **DOUBLE ANGLE BRACING CONNECTION COLUMN WEB** SDT057000-8
SCALE: NONE

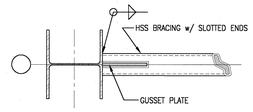

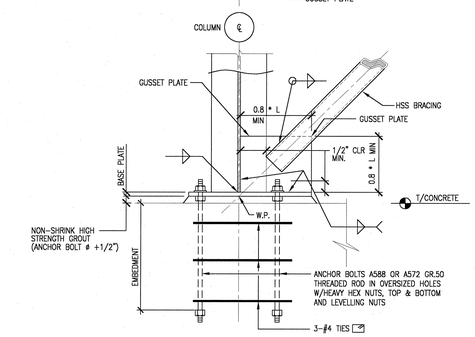

20 S5.20.40 SCALE : NONE **BRACING BASE PLATE CONNECTION TO COLUMN FLANGE** SDT057000-8

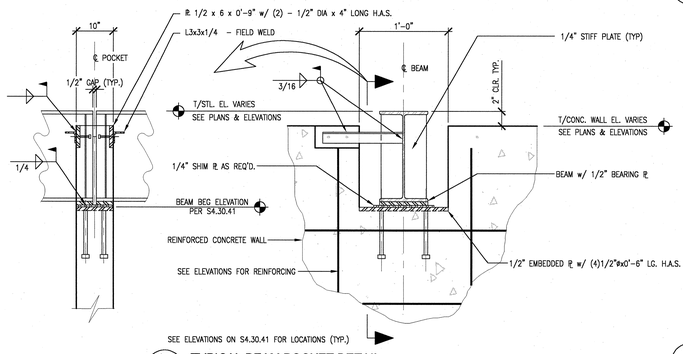

25 S4.30.41 SCALE: 3/4" = 1'-0" **TYPICAL BEAM POCKET DETAIL** SDT057002-8

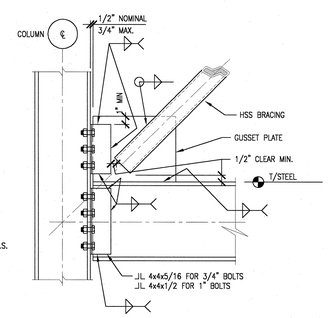

21 S5.20.40 SCALE: NONE **DOUBLE ANGLE BRACING CONNECTION** SDT057000-8

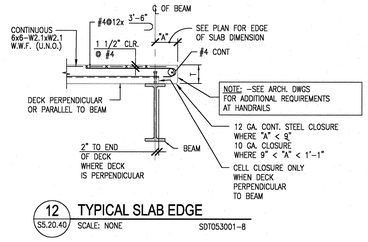

12 S5.20.40 SCALE: NONE **TYPICAL SLAB EDGE** SDT053001-8

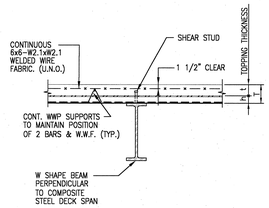

13 S5.20.40 SCALE: NONE **TYPICAL COMPOSITE STEEL DECK SLAB** SDT053001-8

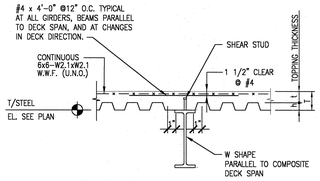

NOTE: SEE TYPICAL COMPOSITE STEEL DECK SLAB DETAIL FOR ADDITIONAL INFORMATION

14 S5.20.40 SCALE: NONE **TYPICAL COMPOSITE STEEL DECK SLAB PARALLEL TO BEAM** SDT053001-8

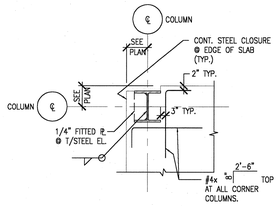

15 S5.20.40 SCALE: NONE **TYPICAL COMPOSITE STEEL DECK SLAB AT CORNER COLUMN** SDT053001-8

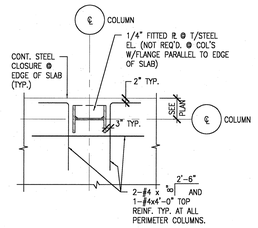

16 S5.20.40 SCALE: NONE **TYPICAL COMPOSITE STEEL DECK SLAB AT PERIMETER COLUMN** SDT053001-8

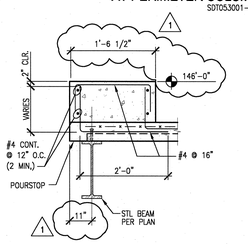

17 S5.20.40 SCALE : NONE **REINFORCED CONCRETE CURB DETAIL** SDT057000-8

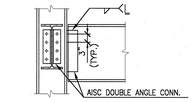

6 S5.20.40 **TYPICAL BEAM TO COLUMN CONNECTION** SDT051001-8
SCALE : NONE

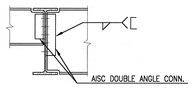

7 S5.20.40 **TYPICAL BEAM TO BEAM CONNECTION** SDT051001-8
SCALE : NONE

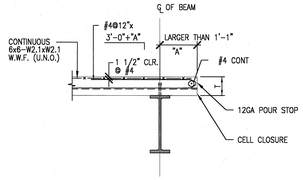

8 S2.01.66 SCALE: NONE **TYPICAL SLAB EDGE AT CANTILEVER** SDT051001-8

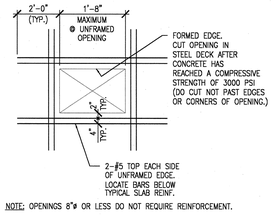

NOTE: OPENINGS 8"ø OR LESS DO NOT REQUIRE REINFORCEMENT.

9 S5.20.40 SCALE: NONE **TYPICAL COMPOSITE STEEL DECK SLAB OPENING** SDT051001-8

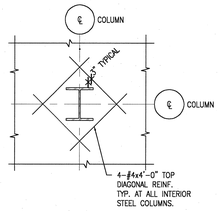

10 S5.20.40 SCALE: NONE **TYPICAL COMPOSITE STEEL DECK SLAB AT COLUMN** SDT051001-8

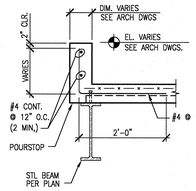

NOTE: SEE ARCH. DWGS FOR LOCATIONS AND DIMENSIONS

11 S5.20.40 SCALE : NONE **MISCELLANEOUS CURB DETAILS** SDT051001-8

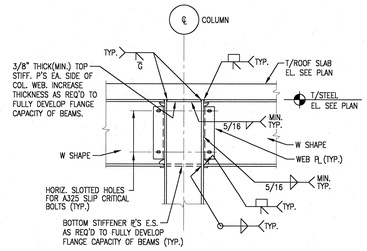

1 S5.20.40 SCALE : NONE **TYPICAL COLUMN MOMENT CONNECTION** SDT051001-8

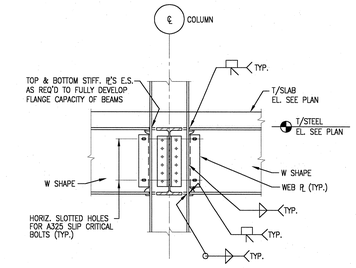

2 S5.20.40 **COLUMN STRONG AXIS MOMENT CONNECTION DETAIL**
SCALE : NONE SDT051001-8

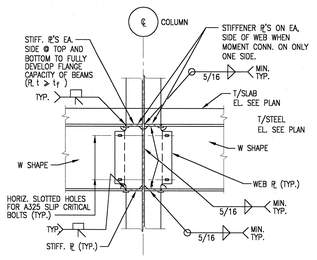

3 S5.20.40 **COLUMN WEAK AXIS MOMENT CONNECTION DETAIL**
SCALE : NONE SDT051001-8

NOTE: VERIFY STIFFENER PLATE THICKNESS AND WELDING WITH SIMULTANEOUS LOADS FROM STRONG AXIS MOMENT CONNECTION REQ'MTS.

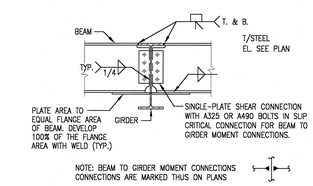

NOTE: BEAM TO GIRDER MOMENT CONNECTIONS CONNECTIONS ARE MARKED THUS ON PLANS

4 S5.20.40 **TYPICAL BEAM / GIRDER MOMENT CONNECTION**
SCALE : NONE SDT051001-8

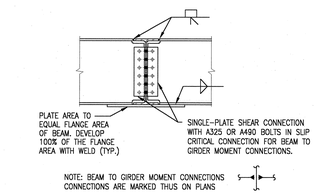

NOTE: BEAM TO GIRDER MOMENT CONNECTIONS CONNECTIONS ARE MARKED THUS ON PLANS

5 S5.20.40 **TYPICAL BEAM MOMENT CONNECTION**
SCALE : NONE SDT051001-8

NOTE: 1. APPLICABLE FOR BEAMS OF EQUAL DEPTH.

ORNL DRAWING NUMBER:

KnightJacobs Joint Venture
701 Scarboro Road, MS 8253
Oak Ridge, TN 37830
865-241-9433
fax 865-241-3400

m+w zander
M+W Zander U.S. Operations, Inc.
549 West Randolph Street
Chicago, IL 60661
Telephone: (312) 577-3200
Fax: (312) 577-3525

NO REPRESENTATION OR WARRANTY, EXPRESSED OR IMPLIED, IS MADE AS TO THE ACCURACY, COMPLETENESS OR USEFULNESS OF THE INFORMATION OR STATEMENTS CONTAINED IN THESE DRAWINGS, OR THAT THE USE OR DISCLOSURE OF ANY INFORMATION, APPARATUS, METHOD, OR PROCESS DISCLOSED IN THESE DRAWINGS MAY NOT INFRINGE PRIVATE RIGHTS OF OTHERS. NO LIABILITY IS ASSUMED WITH RESPECT TO THE USE OF, OR FOR DAMAGES RESULTING FROM THE USE OF ANY INFORMATION, APPARATUS, METHOD, OR PROCESS DISCLOSED IN THESE DRAWINGS. DRAWINGS MADE AVAILABLE FOR INFORMATION TO BIDDER ARE NOT TO BE USED FOR OTHER PURPOSES AND ARE TO BE RETURNED UPON REQUEST OF THE FORWARDING CONTRACTOR.

NUMBER OF SECTION OR DETAIL
DRAWING ON WHICH SECTION OR DETAIL IS SHOWN OR TAKEN
SECTION AND DETAIL KEY

THIS DOCUMENT CONTROLLED BY
CHANGE CONTROL SYSTEM
ENGINEERING PROCEDURE

REV	CHANGE TYPE	CHANGE CONTROL SYSTEM	CHANGE REQUEST NUMBER	DESCRIPTION	DSN	CHK	DEPT
1	–	–	–	RE-ISSUE CERTIFIED FOR CONSTRUCTION 1/22/03	WS	RW	
0	–	–	–	CERTIFIED FOR CONSTRUCTION-12/9/02	WS	RW	

REVISION OR ISSUE PURPOSE

DATE	PE	DATE	PJ	DATE	REQ	DATE	UTB	DATE	RPE	RPE NO	DATE
								JUB	23236	1/10/03
								JUB	23236	12/9/02

REVISION APPROVALS

RZ	AW	BWJ	AK	IM	DM	--	BWJ	--	TW
ST	CV	EC	EE	EM	IE	M	PD	SE	AR

SQUAD CHECK

RPE
JOHN BUSCH REGISTERED ENGINEER CIVIL AGRICULTURE STRUCTURAL NO. 23236 STATE OF TENNESSEE
REV. 1 DATE 1/22/03

DSN	W. SONNA	12/9/02
DRW	T. DEADY	12/9/02
CHK	R. WALKINGTON	12/9/02
DEPT		
PE	C. L. GARREN	
PJ	J. STELLERN	
REQ		
UTB	J. R. LAWSON	

DRAWING APPROVALS

UT-BATTELLE
Oak Ridge National Laboratory
managed for the DEPARTMENT OF ENERGY under U.S. GOVERNMENT contract DE-AC05-00OR22725
UT-BATTELLE, LLC. + Oak Ridge, Tennessee

PROJECT NAME:
CENTER FOR NANOPHASE MATERIALS SCIENCES
TYPICAL STEEL DETAILS

1	48	49	50	PLANT	BLDG	FL	SH.	OF	TYPE	CLASS
3	S	X	X	8	8610		1	1	D	U
51		52		53	A/E DRAWING NUMBER:					REV
NC		NA			S5.20.40					1

AutoCAD