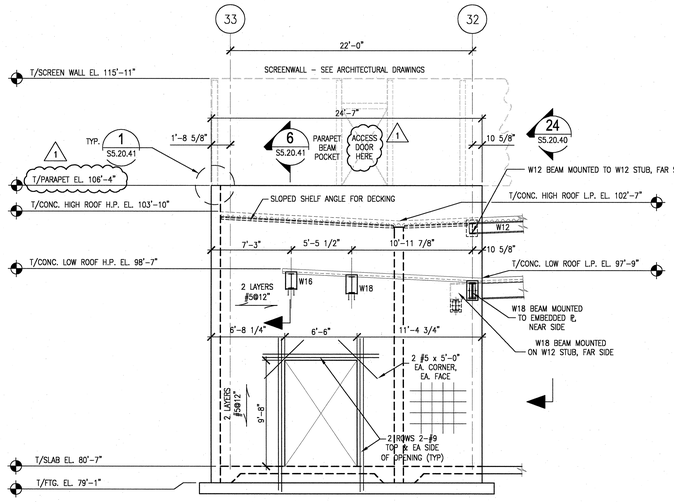

3 REINFORCED CONCRETE WALL ELEVATION
S2.B1.67 SCALE: 3/16"=1'-0" SEL011-8

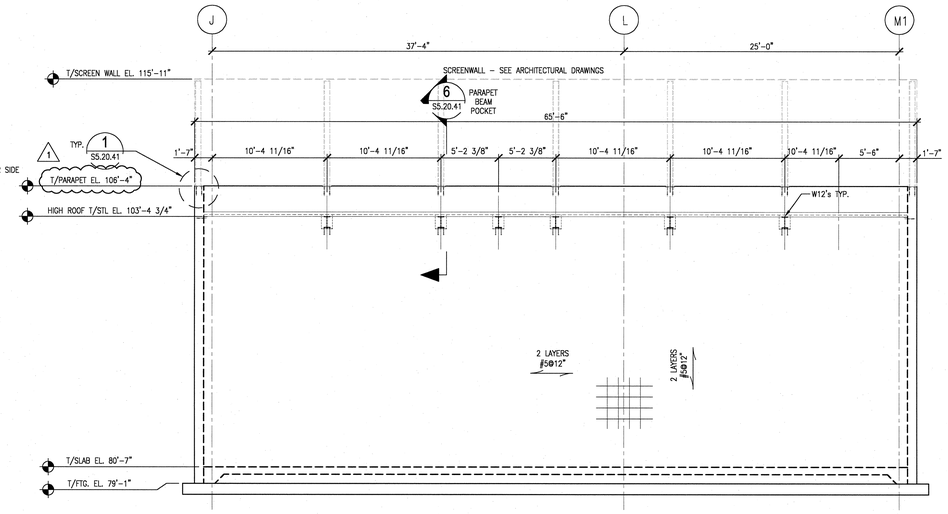

2 REINFORCED CONCRETE WALL ELEVATION
S2.B1.67 SCALE: 3/16"=1'-0" SEL011-8

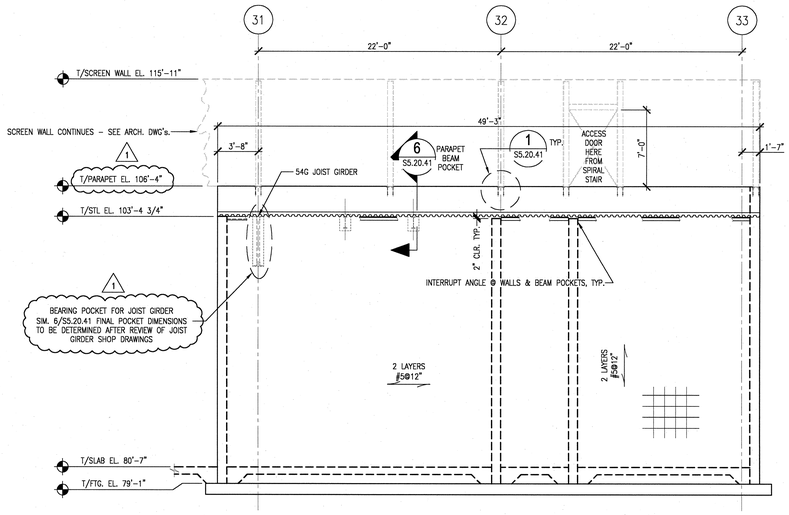

1 REINFORCED CONCRETE WALL ELEVATION
S2.B1.67 SCALE: 3/16"=1'-0" SEL011-8

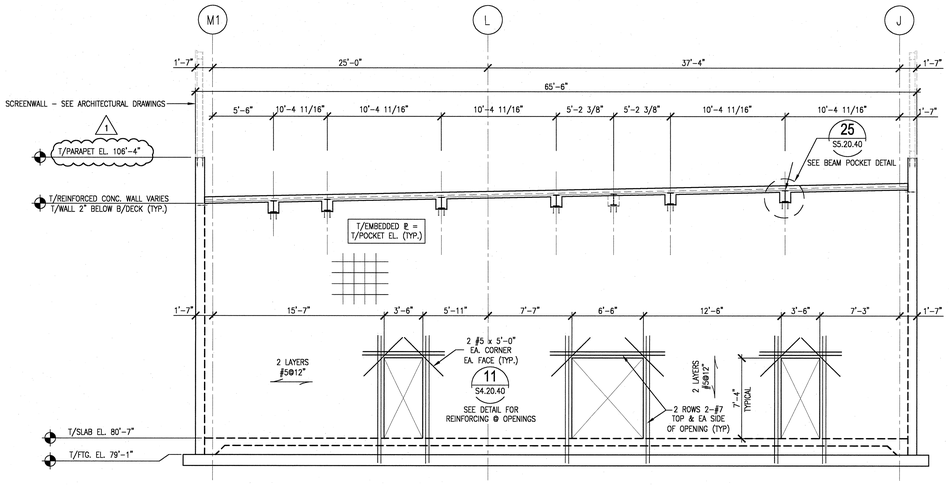

6 REINFORCED CONCRETE WALL ELEVATION
S2.B1.67 SCALE: 3/16"=1'-0" SEL011-8

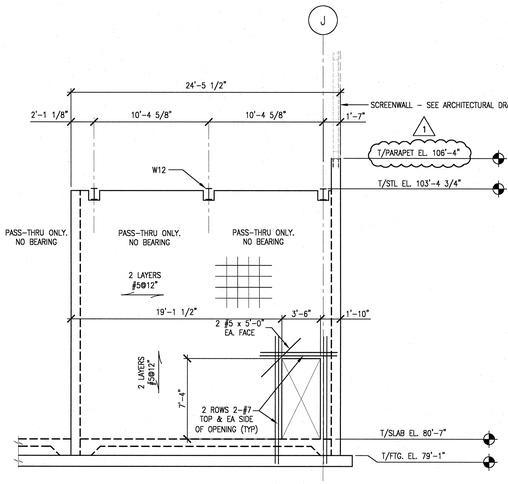

5 REINFORCED CONCRETE WALL ELEVATION
S2.B1.67 SCALE: 3/16"=1'-0" SEL011-8

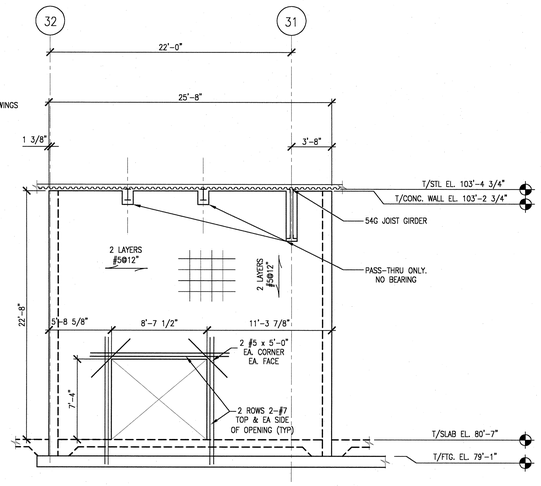

4 REINFORCED CONCRETE WALL ELEVATION
S2.B1.67 SCALE: 3/16"=1'-0" SEL011-8

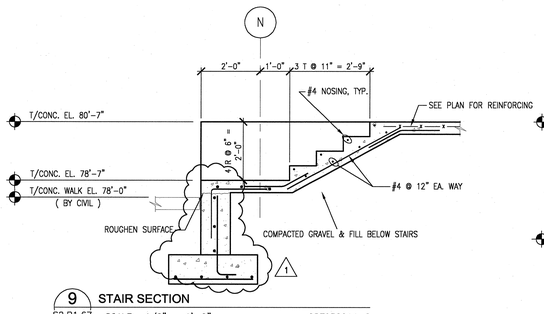

9 STAIR SECTION
S2.B1.67 SCALE: 1/2" = 1'-0" SDT032014-8

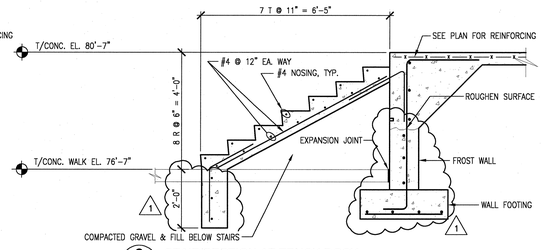

8 STAIR SECTION AT TRUCK DOCK
S2.B1.67 SCALE: 1/2" = 1'-0" SDT032014-8

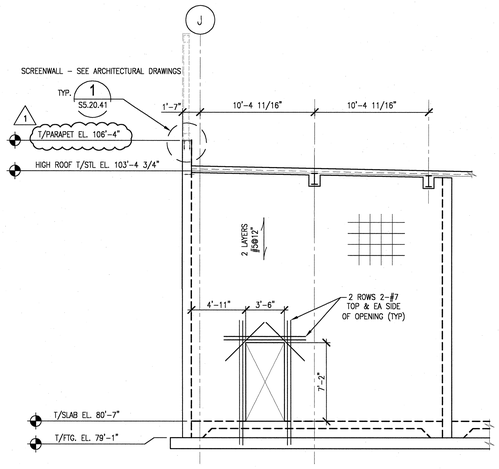

7 REINFORCED CONCRETE WALL ELEVATION
S2.B1.67 SCALE: 3/16"=1'-0" SEL011-8

NOTE: COORDINATE FINAL DOOR LOCATIONS AND SIZES WITH CLEANROOM DOOR MANUFACTURER PRIOR TO POURING WALLS

NO REPRESENTATION OR WARRANTY, EXPRESSED OR IMPLIED, IS MADE AS TO THE ACCURACY, COMPLETENESS OR USEFULNESS OF THE INFORMATION OR STATEMENTS CONTAINED IN THESE DRAWINGS, OR THAT THE USE OR DISCLOSURE OF ANY INFORMATION, APPARATUS, METHOD, OR PROCESS DISCLOSED IN THESE DRAWINGS MAY NOT INFRINGE PRIVATE RIGHTS OF OTHERS. NO LIABILITY IS ASSUMED WITH RESPECT TO THE USE OF, OR FOR DAMAGES RESULTING FROM THE USE OF ANY INFORMATION, APPARATUS, METHOD, OR PROCESS DISCLOSED IN THESE DRAWINGS. DRAWINGS MADE AVAILABLE FOR INFORMATION TO BIDDER ARE NOT TO BE USED FOR OTHER PURPOSES AND ARE TO BE RETURNED UPON REQUEST OF THE FORWARDING CONTRACTOR.

NUMBER OF SECTION OR DETAIL
DRAWING ON WHICH SECTION OR DETAIL IS SHOWN OR TAKEN
SECTION AND DETAIL KEY

THIS DOCUMENT CONTROLLED BY
CHANGE CONTROL SYSTEM _____
ENGINEERING PROCEDURE _____

REV	CHANGE TYPE	CHANGE CONTROL SYSTEM	CHANGE REQUEST NUMBER	DESCRIPTION	DSN	CHK	DEPT
1	–	–	–	RE-ISSUE CERTIFIED FOR CONSTRUCTION 1/22/03	WS	RW	
0	–	–	–	CERTIFIED FOR CONSTRUCTION-12/9/02	WS	RW	

REVISION OR ISSUE PURPOSE

DATE	PE	DATE	PJ	DATE	REQ	DATE	UTB	DATE	RPE	RPE NO	DATE
									JJB	23236	1/10/03
									JJB	23236	12/9/02

REVISION APPROVALS

ST	CV	EC	EE	EM	IE	M	PD	SE	AR
RZ	AW	BWJ	AK	IM	DM	--	BWJ	--	TW

SQUAD CHECK

RPE: JOHN BISCHOFF, REGISTERED ENGINEER, AGRICULTURE & COMMERCE, NO. 26350, STATE OF TENNESSEE
REV. 1 DATE 1/22/03 UTB J. R. LAWSON
DRAWING APPROVALS

DSN	W. SONNA	12/9/02
DRW	T. DEADY	12/9/02
CHK	R. WALKINGTON	12/9/02
DEPT		
PE	C. L. GARREN	
PJ	J. STELLERN	
REQ		
UTB	J. R. LAWSON	

ORNL DRAWING NUMBER:

Knight/Jacobs Joint Venture
701 Scarboro Road, MS 8253
Oak Ridge, TN 37830
865-241-9433
fax 865-241-3400

m+w zander
M+W Zander U.S. Operations, Inc.
549 West Randolph Street
Chicago, IL 60661
Telephone: (312) 577-3200
Fax: (312) 577-3525

UT-BATTELLE
Oak Ridge National Laboratory
managed for the DEPARTMENT OF ENERGY under U.S. GOVERNMENT contract DE-AC05-00OR22725
UT-BATTELLE, LLC. ◆ Oak Ridge, Tennessee

PROJECT NAME:
CENTER FOR NANOPHASE MATERIALS SCIENCES
REINFORCED CONCRETE WALL ELEVATIONS AT CLEAN ROOM

1	48	49	50	PLANT	BLDG	FL	SH.	OF	TYPE	CLASS
3	S	X	X	8	8610		1	1	S	U

51	52	53	A/E DRAWING NUMBER:	REV
NC	NA		S4.30.41	1

AutoCAD