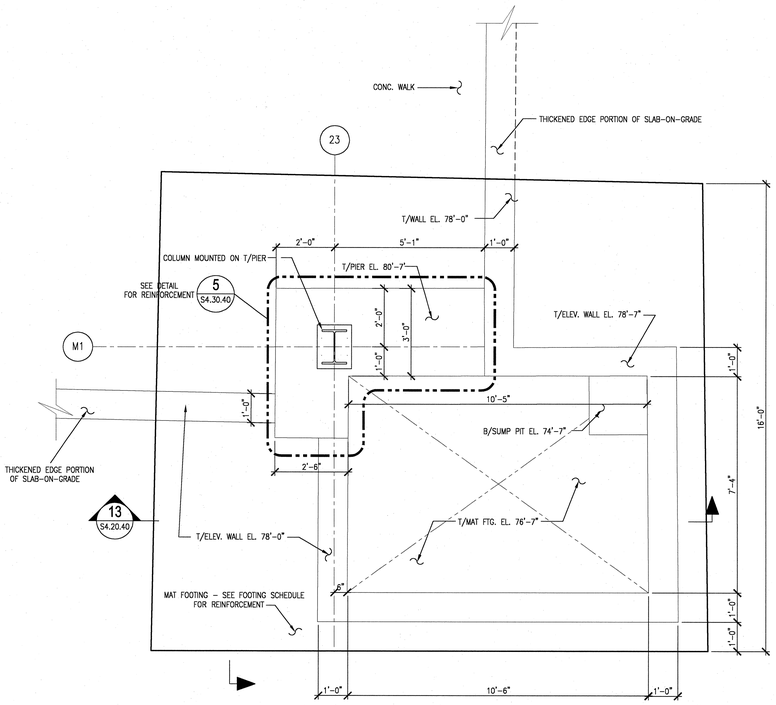

4 S2.B1.66 ENLARGED PLAN AT ELEVATOR PIT
SCALE: 1/2"=1'-0"

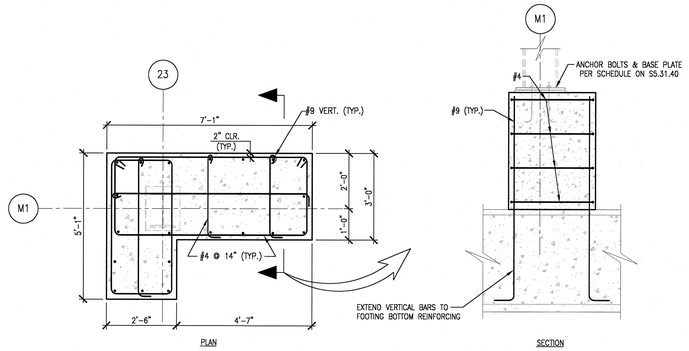

5 S4.30.40 PIER REINFORCING DETAIL
SCALE: 1/2"=1'-0" SDT032013-8

FOOTING SCHEDULE

BRG = 2500 PSF
fy = 60 ksi
f'c = 4 ksi

LABEL	SIZE			BOTTOM REINFORCING		REMARKS
	WIDTH	LENGTH	DEPTH	LONGITNDINAL-X	TRANSVERSE-Z	
F1	6'-0"	6'-0"	1'-3"	7-#7	7-#7	
F2	10'-0"	10'-0"	2'-1"	13-#8	13-#8	
F3	9'-0"	9'-0"	1'-11"	9-#9	9-#9	
F4	7'-0"	7'-0"	1'-5"	7-#8	7-#8	#6 @ 12" EA. WAY TOP REINF
F5	15'-0"	15'-0"	2'-11"	19#10	19-#10	
F6	12'-0"	12'-0"	2'-5"	12-#10	12-#10	#6 @ 12" EA. WAY TOP REINF
F7	12'-0"	12'-0"	2'-5"	12-#10	12-#10	
F8	11'-0"	11'-0"	2'-3"	10-#10	10-#10	
F9	7'-0"	7'-0"	1'-5"	7-#8	7-#8	
F10	15'-0"	15'-0"	2'-11"	19-#10	19-#10	#6 @ 12" EA. WAY TOP REINF
F11	16'-0"	16'-0"	3'-6"	20-#10	20-#10	#6 @ 12" EA. WAY TOP REINF
F12	16'-0"	16'-0"	3'-6"	20-#10	20-#10	
F13	10'-0"	10'-0"	2'-1"	13-#8	13-#8	#6 @ 12" EA. WAY TOP REINF
F14	8'-0"	8'-0"	1'-8"	9-#8	9-#8	#6 @ 12" EA. WAY TOP REINF
F15	18'-6"	16'-0"	2'-6"	19-#8 T 35-#8 B	16-#8 T 30-#8 B	2 LAYERS REINF
F16	16'-0"	23'-0"	3'-6"	16-#11	26-#11	#7 @ 12" EA. WAY TOP REINF
F17	10'-0"	20'-0"	2'-5"	12-#10	25-#10	#6 @ 12" EA. WAY TOP REINF
F18	4'-0"	4'-0"	1'-0"	6#5	6#5	6#5 EA. WAY TOP REINF
F19	4'-0"	8'-0"	1'-0"	6#5	12#5	#5 @ 12" EA. WAY TOP REINF

SDH02001-6

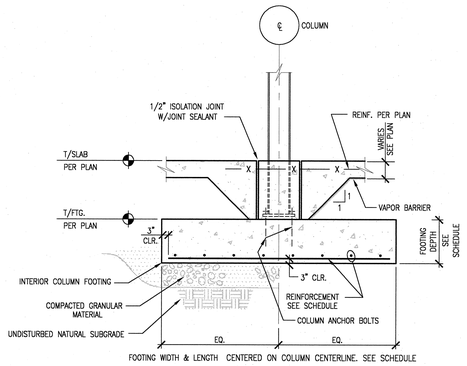

1 S2.B1.66 TYPICAL INTERIOR COLUMN FOOTING
SCALE: N.T.S. SDT058001-8

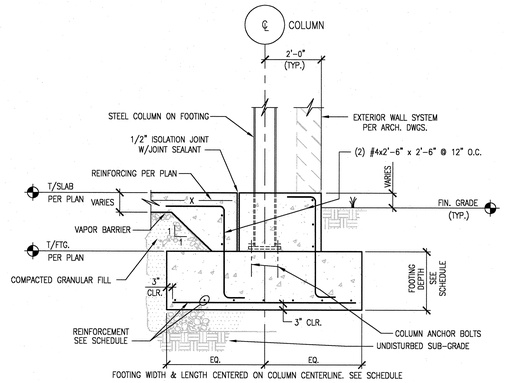

SEE PLANS FOR LOCATION

2 S2.B1.67 TYPICAL PERIMETER COLUMN FOOTING
SCALE: N.T.S. SDT058000-8

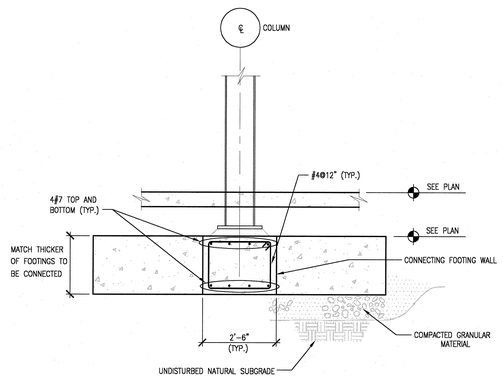

3 S2.B1.66 CONNECTING WALL @ BRACING
SCALE: 1/2"=1'-0" SDT058001-8

NO REPRESENTATION OR WARRANTY, EXPRESSED OR IMPLIED, IS MADE AS TO THE ACCURACY, COMPLETENESS OR USEFULNESS OF THE INFORMATION OR STATEMENTS CONTAINED IN THESE DRAWINGS, OR THAT THE USE OR DISCLOSURE OF ANY INFORMATION, APPARATUS, METHOD, OR PROCESS DISCLOSED IN THESE DRAWINGS MAY NOT INFRINGE PRIVATE RIGHTS OF OTHERS. NO LIABILITY IS ASSUMED WITH RESPECT TO THE USE OF, OR FOR DAMAGES RESULTING FROM THE USE OF ANY INFORMATION, APPARATUS, METHOD, OR PROCESS DISCLOSED IN THESE DRAWINGS. DRAWINGS MADE AVAILABLE FOR INFORMATION TO BIDDER ARE NOT TO BE USED FOR OTHER PURPOSES AND ARE TO BE RETURNED UPON REQUEST OF THE FORWARDING CONTRACTOR.

NUMBER OF SECTION OR DETAIL
DRAWING ON WHICH SECTION OR DETAIL IS SHOWN OR TAKEN
SECTION AND DETAIL KEY

THIS DOCUMENT CONTROLLED BY
CHANGE CONTROL SYSTEM
ENGINEERING PROCEDURE

REV	CHANGE TYPE	CHANGE CONTROL SYSTEM	CHANGE REQUEST NUMBER	DESCRIPTION	DSN	CHK	DEPT
1	–	–	–	RE-ISSUE CERTIFIED FOR CONSTRUCTION 1/22/03	WS	RW	
0	–	–	–	CERTIFIED FOR CONSTRUCTION-12/9/02	WS	RW	

REVISION OR ISSUE PURPOSE

DATE	PE	DATE	PJ	DATE	REQ	DATE	UTB	DATE	RPE	RPE NO	DATE
									JJB	23236	1/10/03
									JJB	23236	12/9/02

REVISION APPROVALS

RZ	AW	BWJ	AK	IM	DM	--	BWJ	--	TW
ST	CV	EC	EE	EM	IE	M	PD	SE	AR

SQUAD CHECK

RPE
JOHN BUSCH
REGISTERED ENGINEER
AGRICULTURE
COMMERCE
NO. 23236
STATE OF TENNESSEE

REV. 1 DATE 1/22/03

DSN	W. SONNA	12/9/02
DRW	T. DEADY	12/9/02
CHK	R. WALKINGTON	12/9/02
DEPT		
PE	C. L. GARREN	
PJ	J. STELLERN	
REQ		
UTB	J. R. LAWSON	

DRAWING APPROVALS

ORNL DRAWING NUMBER:

Knight/Jacobs Joint Venture
701 Scarboro Road, MS 8253
Oak Ridge, TN 37830
865-241-9433
fax 865-241-3400

m+w zander
M+W Zander U.S. Operations, Inc.
549 West Randolph Street
Chicago, IL 60661
Telephone: (312) 577-3200
Fax: (312) 577-3525

UT-BATTELLE
Oak Ridge National Laboratory
managed for the DEPARTMENT OF ENERGY under U.S. GOVERNMENT contract DE-AC05-00OR22725
UT-BATTELLE, LLC, ◆ Oak Ridge, Tennessee

PROJECT NAME:
CENTER FOR NANOPHASE MATERIALS SCIENCES
CONCRETE
FOOTING & PIER SCHEDULE

1	48	49	50	PLANT	BLDG	FL	SH.	OF	TYPE	CLASS
3	S	X	X	8	8610		1	1	S	U
51		52		53	A/E DRAWING NUMBER:		S4.30.40		REV 1	
NC		NA								

Date: 01/15/2002 Time: 15:52:54
CN=C_AQLEPROJECT/1005/XL/DWGS/S4A_SR/M2_R1STU2-01-013MS
P:\ORNL\1002\S4-01-13MS-Elec-STU2.dwg
AutoCAD