NEXT ASS'Y: FINAL ASS'Y:

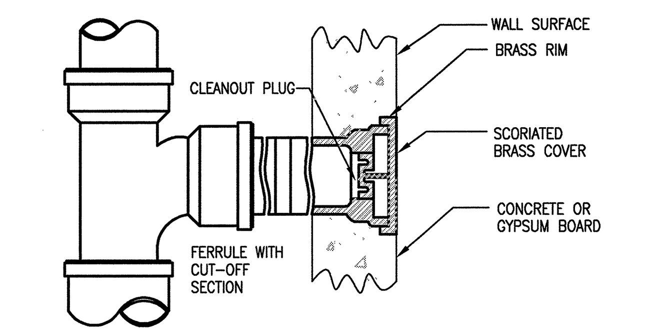

50 WALL CLEAN-OUT DETAIL
NOT TO SCALE

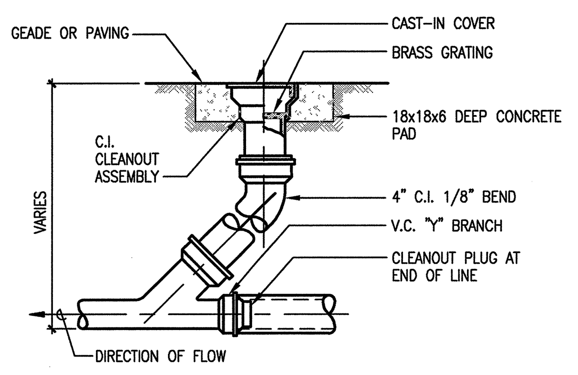

42 CLEAN-OUT TO GRADE DETAIL
NOT TO SCALE

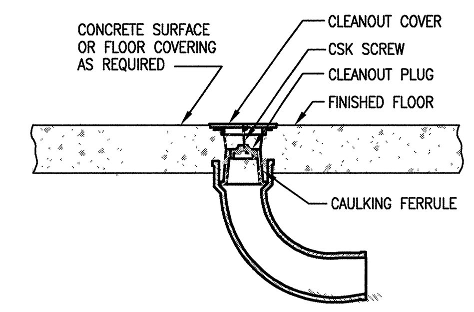

34 FLOOR CLEAN-OUT DETAIL
NOT TO SCALE

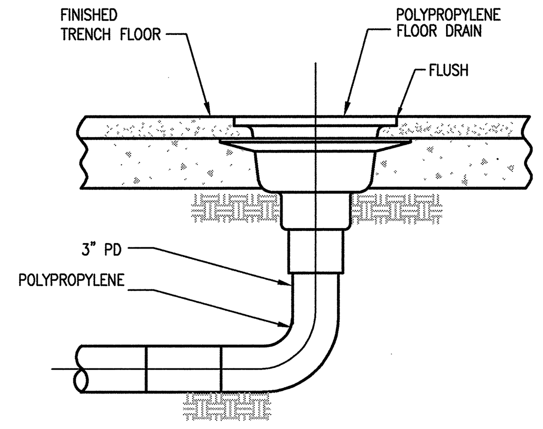

26 FLOOR DRAIN DETAIL (FD-2)
NOT TO SCALE

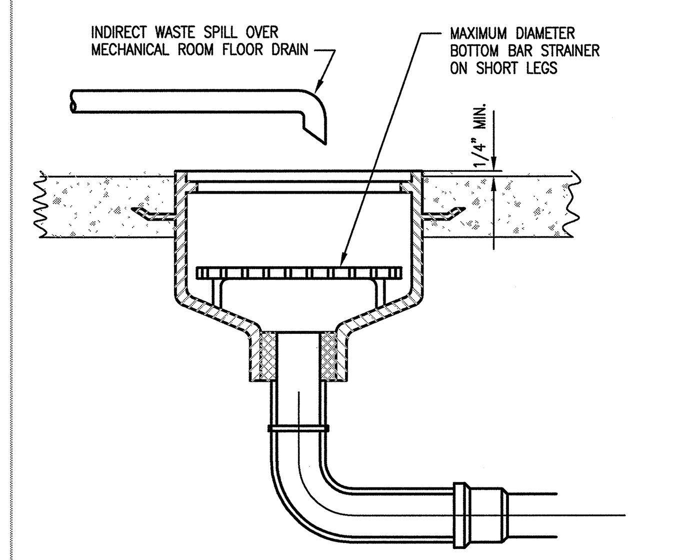

18 EQUIP. ROOM FLOOR SINK (FS-1) WITH INDIRECT WASTE DETAIL
NOT TO SCALE

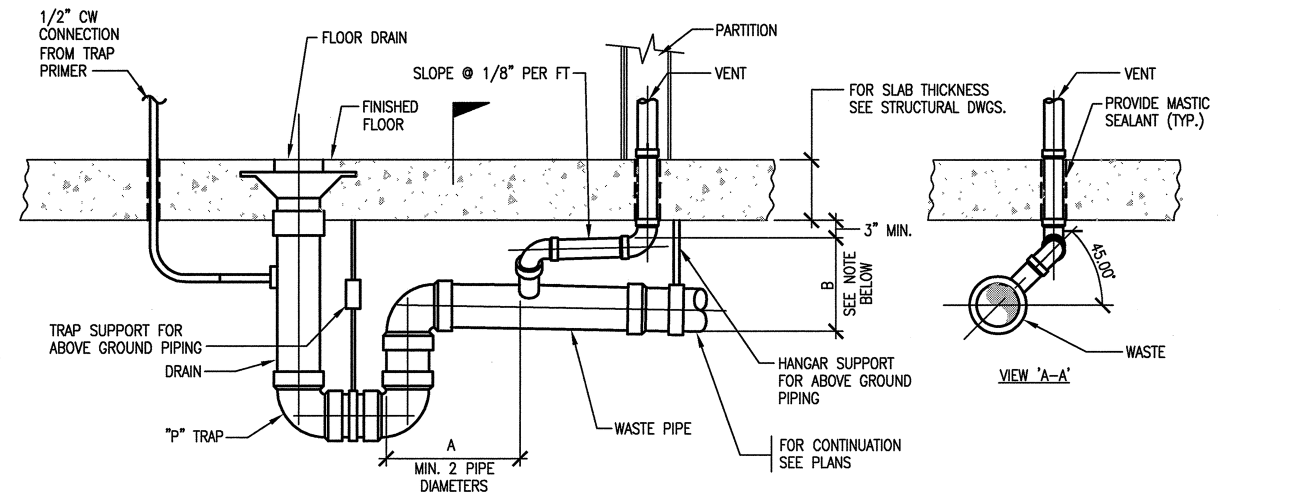

WASTE SIZE	VENT SIZE	'A' MAX	'A' SLOPE "/FT	'B'
2"	1-1/4"	8'-0"	1/4	8"±
3"	1-1/2"	10'-0"	1/8	10-1/2"±
4"	2"	12'-0"	1/8	10-1/2"±

NOTE: DIMENSION 'B' DOES NOT INCLUDE FALL DUE TO SLOPE, ADD FALL DUE TO VENT SLOPE TO OBTAIN INVERT ELEVATION.

10 FLOOR DRAIN WITH TRAP PRIMER DETAIL (FD-1)
NOT TO SCALE

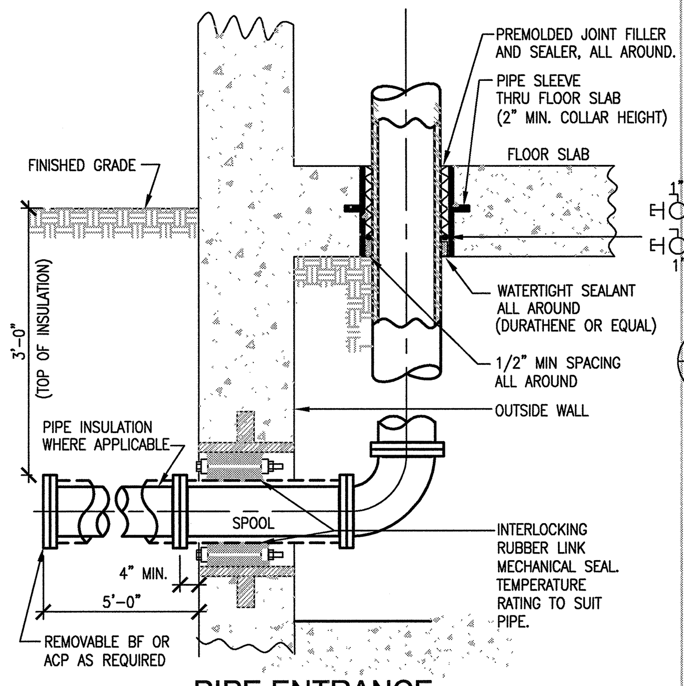

52 PIPE ENTRANCE PENETRATION WITHOUT VAULT
NOT TO SCALE

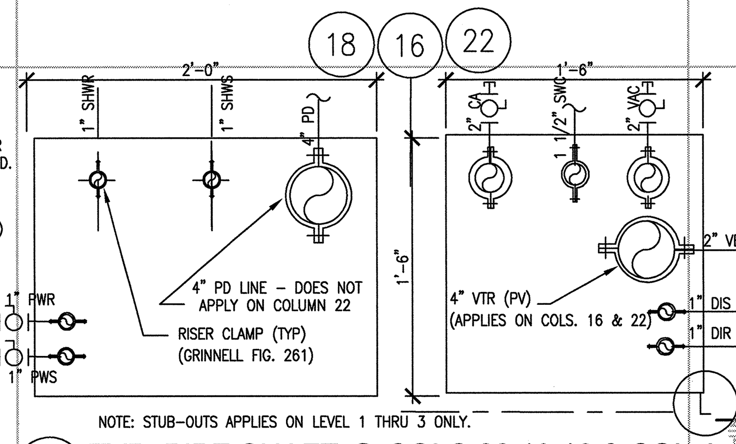

43 TYP. PIPE SHAFT @ COLS.22,18,16 & COL. L
NOT TO SCALE

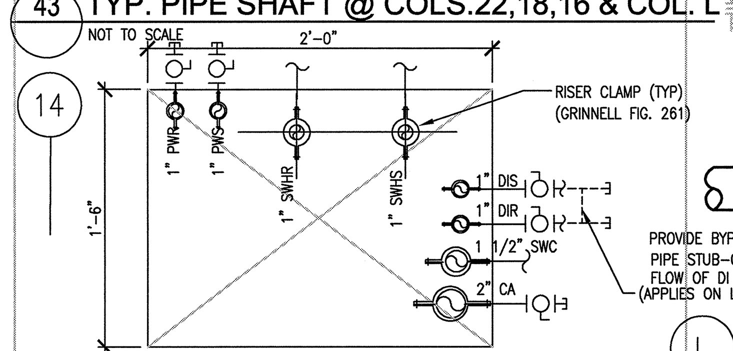

44 TYP. PIPE SHAFT @ COLUMN 14 & COL. L
NOT TO SCALE NOTE: STUB-OUTS APPLIES ON LEVEL 1 THRU 3 ONLY.

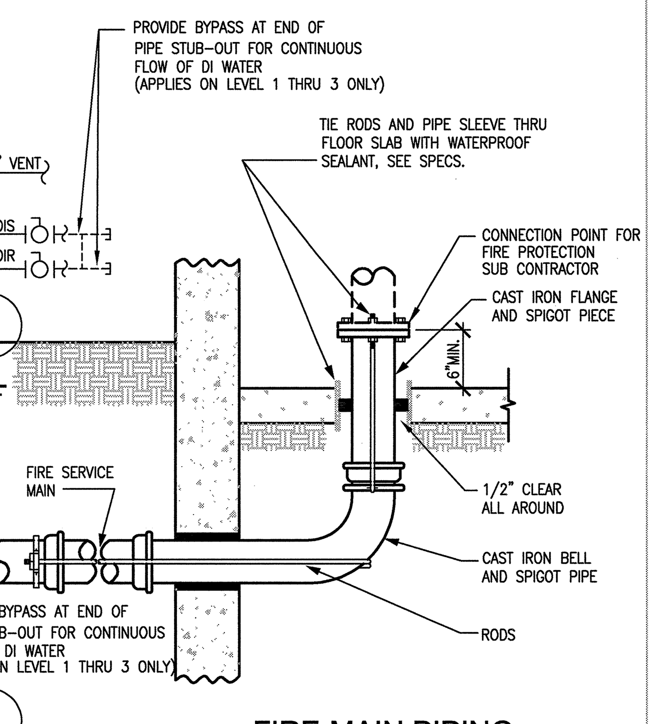

36 FIRE MAIN PIPING ENTRANCE TO BUILDING DETAIL
SCALE: NOT TO SCALE

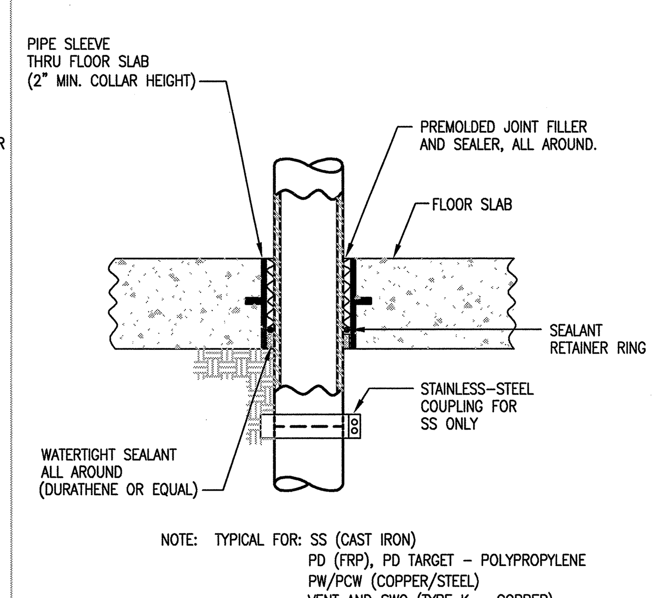

NOTE: TYPICAL FOR: SS (CAST IRON)
PD (FRP), PD TARGET - POLYPROPYLENE
PW/PCW (COPPER/STEEL)
VENT AND SWC (TYPE K - COPPER)

28 PIPING PENETRATION THRU FLOOR DETAIL
NOT TO SCALE

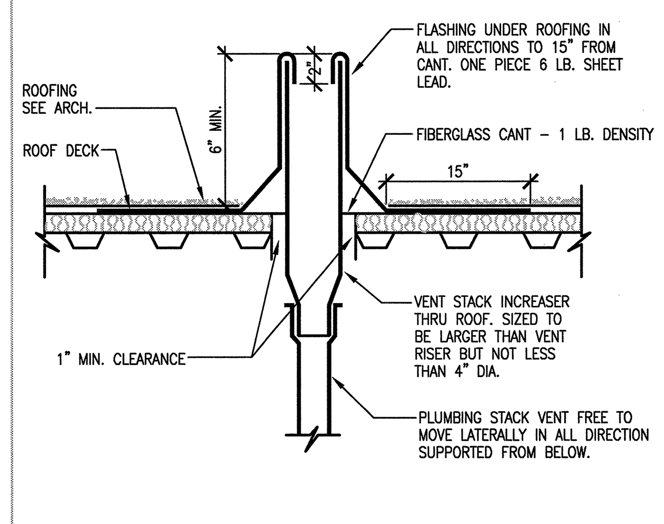

20 VENT THRU ROOF DETAIL
NOT TO SCALE

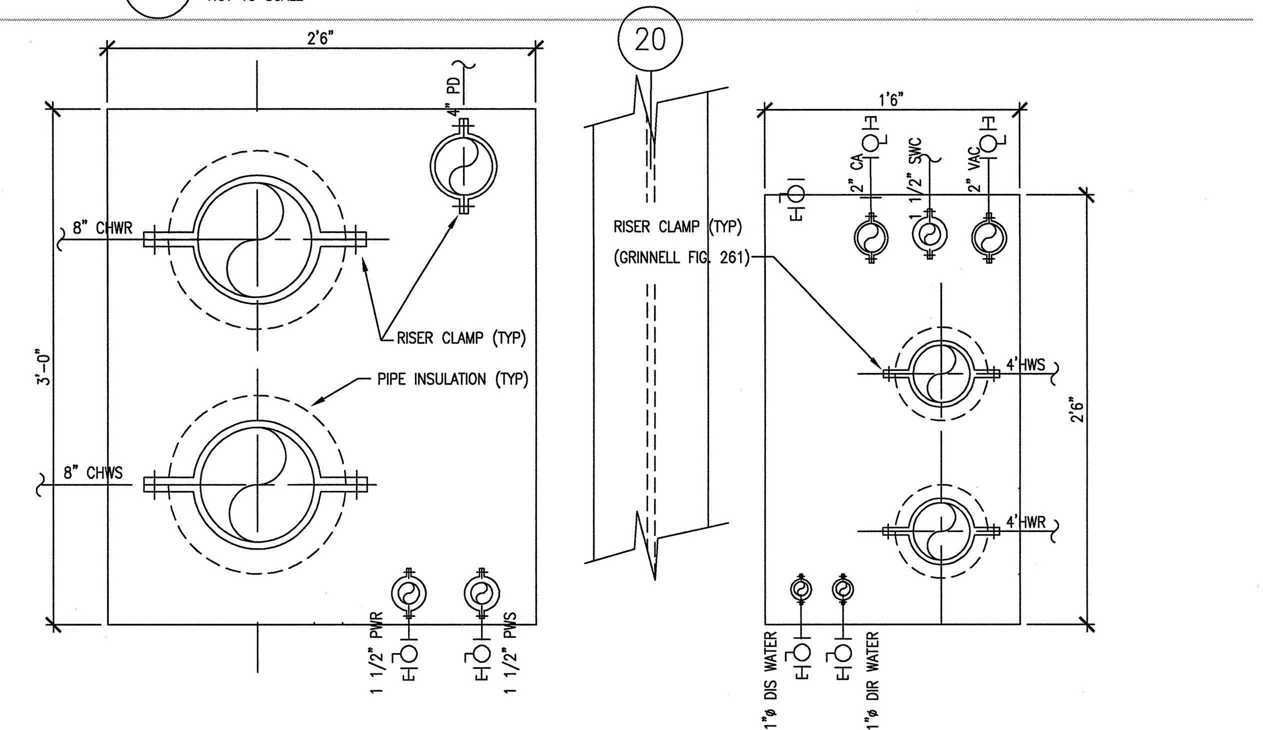

12 TYPICAL PIPE SHAFT @ COLUMN 20 & COLUMN L
NOT TO SCALE NOTE: STUB-OUTS APPLIES ON LEVEL 1 THRU 3 ONLY.

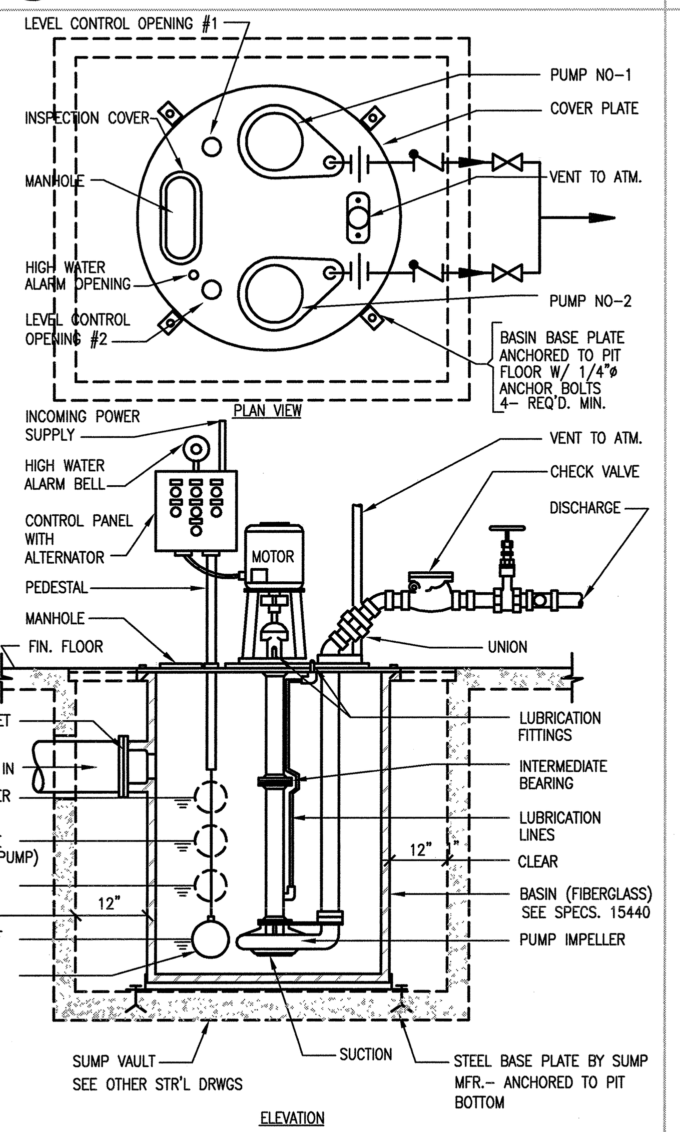

55 VERTICAL LIFT DUPLEX SEWAGE EJECTOR
NOT TO SCALE

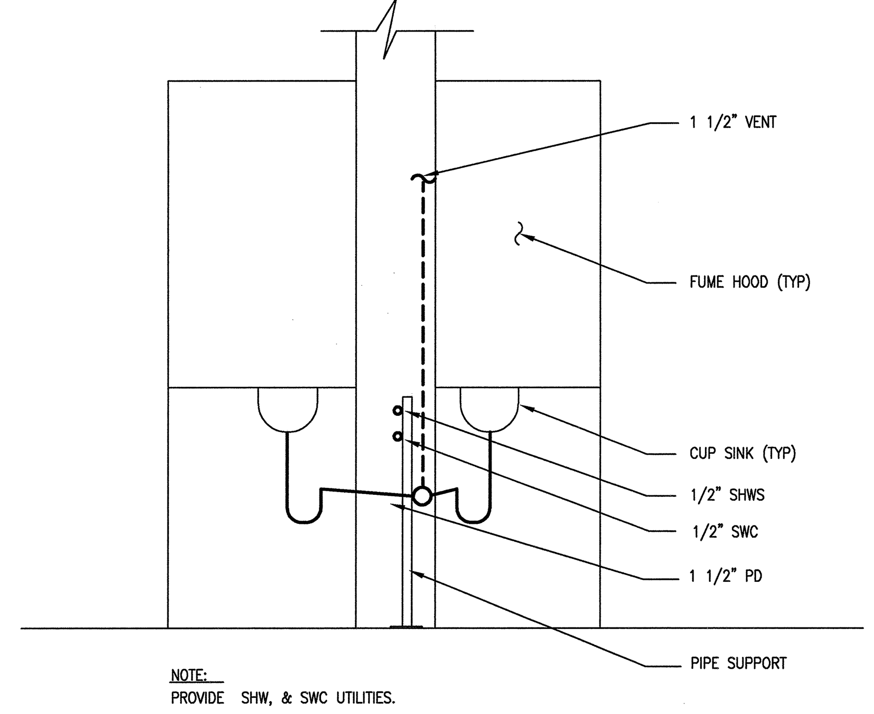

NOTE:
PROVIDE SHW, & SWC UTILITIES.

46 TYP. FUME HOOD PIPING DETAIL
NOT TO SCALE

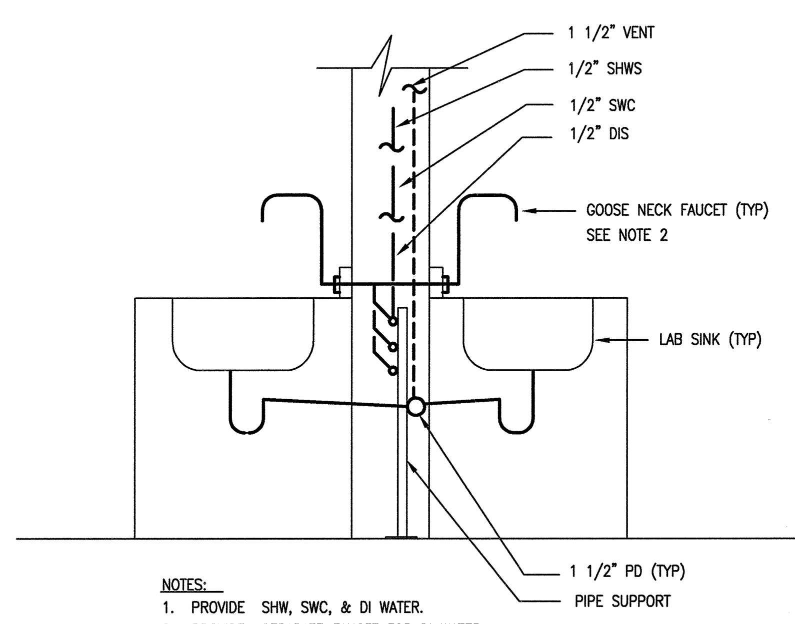

NOTES:
1. PROVIDE SHW, SWC, & DI WATER.
2. PROVIDE SEPARATE FAUCET FOR DI WATER.

38 TYP. LAB. SINK PIPING DETAIL
NOT TO SCALE

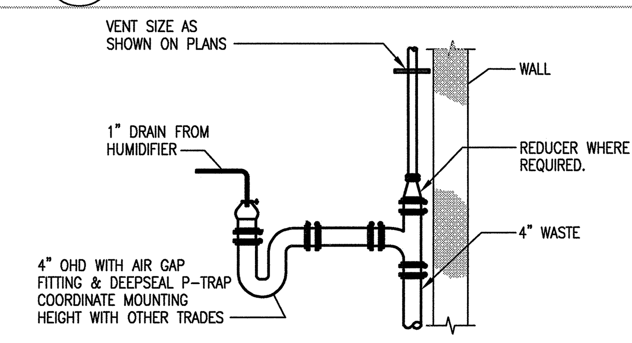

21 OPEN HUB DRAIN DETAIL
NOT TO SCALE

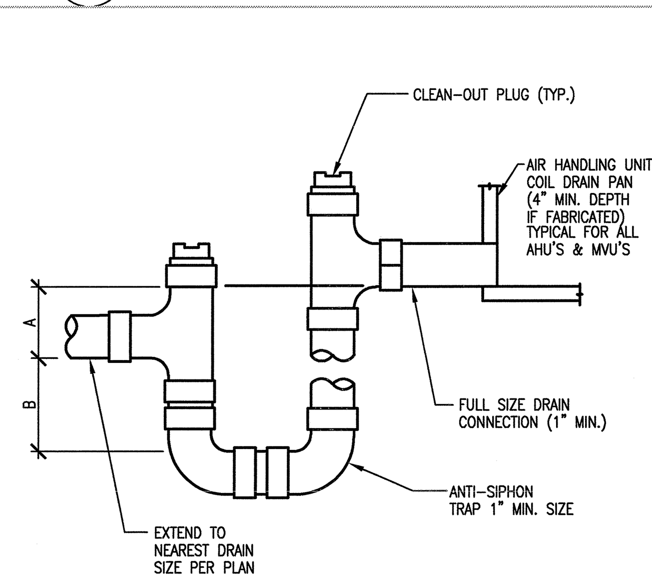

NOTES:
1. FOR BLOW THRU:
A = 1" MIN.
B = FAN DISCHARGE S.P. + 1"
2. FOR DRAW THRU:
A = 4" MIN.
B = FAN SUCTION S.P. + 1"

23 COIL DRAIN TRAP DETAIL
NOT TO SCALE

WHEN CLEARANCE THROUGH WALLS, FLOORS ETC IS PROVIDED FOR AUTOMATIC SPRINKLER PIPING WITH A PIPE SLEEVE, THE SLEEVE MUST HAVE A NOMINAL DIAMETER 2" LARGER THAN THE PIPE FOR SIZES 1" TO 3". FOR PIPE SIZES 4" AND ABOVE THE DIAMETER OF THE SLEEVE MUST BE AT LEAST 4" LARGER THAN THE PIPE DIAMETER. SEE NFPA 4-14.4.3.4.1.

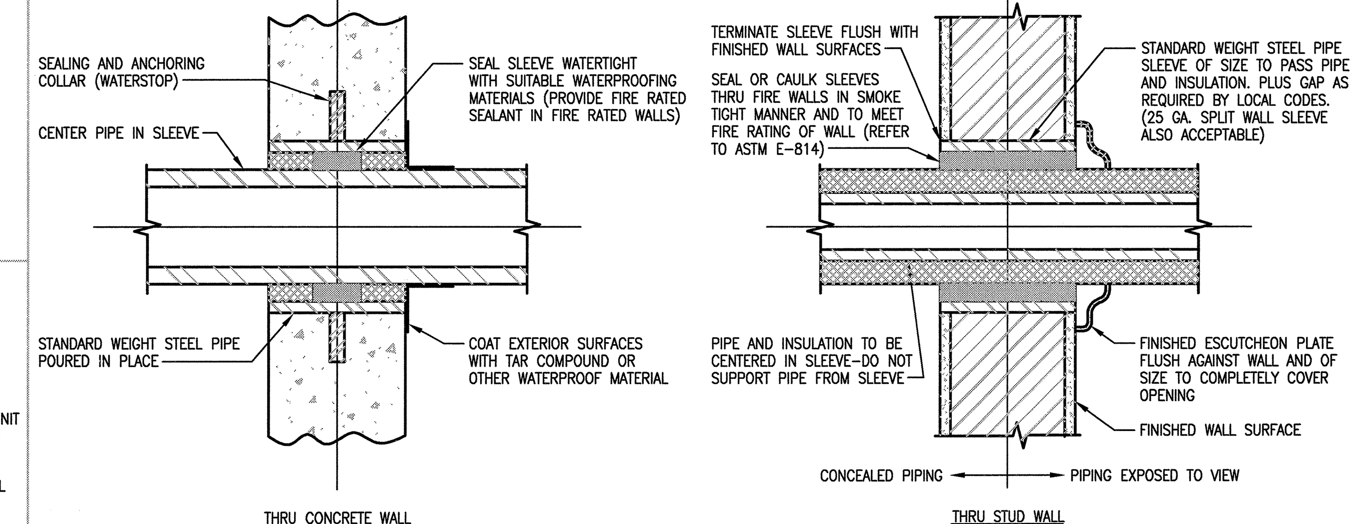

14 PIPE SLEEVE DETAIL
NOT TO SCALE

NO REPRESENTATION OR WARRANTY, EXPRESSED OR IMPLIED, IS MADE AS TO THE ACCURACY, COMPLETENESS OR USEFULNESS OF THE INFORMATION OR STATEMENTS CONTAINED IN THESE DRAWINGS, OR THAT THE USE OR DISCLOSURE OF ANY INFORMATION, APPARATUS, METHOD, OR PROCESS DISCLOSED IN THESE DRAWINGS MAY NOT INFRINGE PRIVATE RIGHTS OF OTHERS. NO LIABILITY IS ASSUMED WITH RESPECT TO THE USE OF, OR FOR DAMAGES RESULTING FROM THE USE OF ANY INFORMATION, APPARATUS, METHOD, OR PROCESS DISCLOSED IN THESE DRAWINGS. DRAWINGS MADE AVAILABLE FOR INFORMATION TO BIDDER ARE NOT TO BE USED FOR OTHER PURPOSES AND ARE TO BE RETURNED UPON REQUEST OF THE FORWARDING CONTRACTOR.

NUMBER OF SECTION OR DETAIL — DRAWING ON WHICH SECTION OR DETAIL IS SHOWN OR TAKEN
SECTION AND DETAIL KEY

THIS DOCUMENT CONTROLLED BY
CHANGE CONTROL SYSTEM ________
ENGINEERING PROCEDURE ________

REV	CHANGE TYPE	CHANGE CONTROL SYSTEM	CHANGE REQUEST NUMBER	DESCRIPTION	DSN	CHK	DEPT	DATE	PE	DATE	PJ	DATE	REQ	DATE	UTB	DATE	RPE	RPE NO	DATE
0				CERTIFIED FOR CONSTRUCTION - 12/9/02	MI	BWJ			[signature]	1/03	[signature]	1/03	[signature]	1/03			BWJ	105869	12/9/02

REVISION OR ISSUE PURPOSE — REVISION APPROVALS

SQUAD CHECK

ST	CV	EC	EE	EM	IE	M	PD	SE	AR
BZ	AW	BS	AK	IM	DM	–	BWJ	–	TW

RPE: [seal: BRUCE W. JOHNSON, REGISTERED ENGINEER, No. 00105869, STATE OF TENNESSEE]
DSN
DRW
CHK
DEPT
PE [signature] 1/24/03
PJ [signature] 1/23/03
REQ [signature] 1/24/03
REV. 0 DATE 12/9/02 UTB
DRAWING APPROVALS

ORNL DRAWING NUMBER:

Knight/Jacobs Joint Venture
701 Scarboro Road, MS 8253
Oak Ridge, TN 37830
865-241-9433
fax 865-241-3400

m+w zander
M+W Zander U.S. Operations, Inc.
549 West Randolph Street
Chicago, IL 60661
Telephone: (312) 577-3200
Fax: (312) 577-3525

UT-BATTELLE
Oak Ridge National Laboratory
managed for the DEPARTMENT OF ENERGY under
U.S. GOVERNMENT contract DE-AC05-00OR22725
UT-BATTELLE, LLC, © Oak Ridge, Tennessee

PROJECT NAME:
CENTER FOR NANOPHASE MATERIALS SCIENCES
PLUMBING DETAILS

1	48	49	50	PLANT	BLDG	FL	SH.	OF	TYPE	CLASS
3	P	X	X	8	8610		1	1	P	U

51	52	53	A/E DRAWING NUMBER:	REV
NC	NA		P6.11.40	0

AutoCAD P:\ORNL\S0230.01-CNMS-Titlel-II\0700-cadd\0720-plumbing\P6-11-40.dwg @ 1/20/03 - 3:57pm