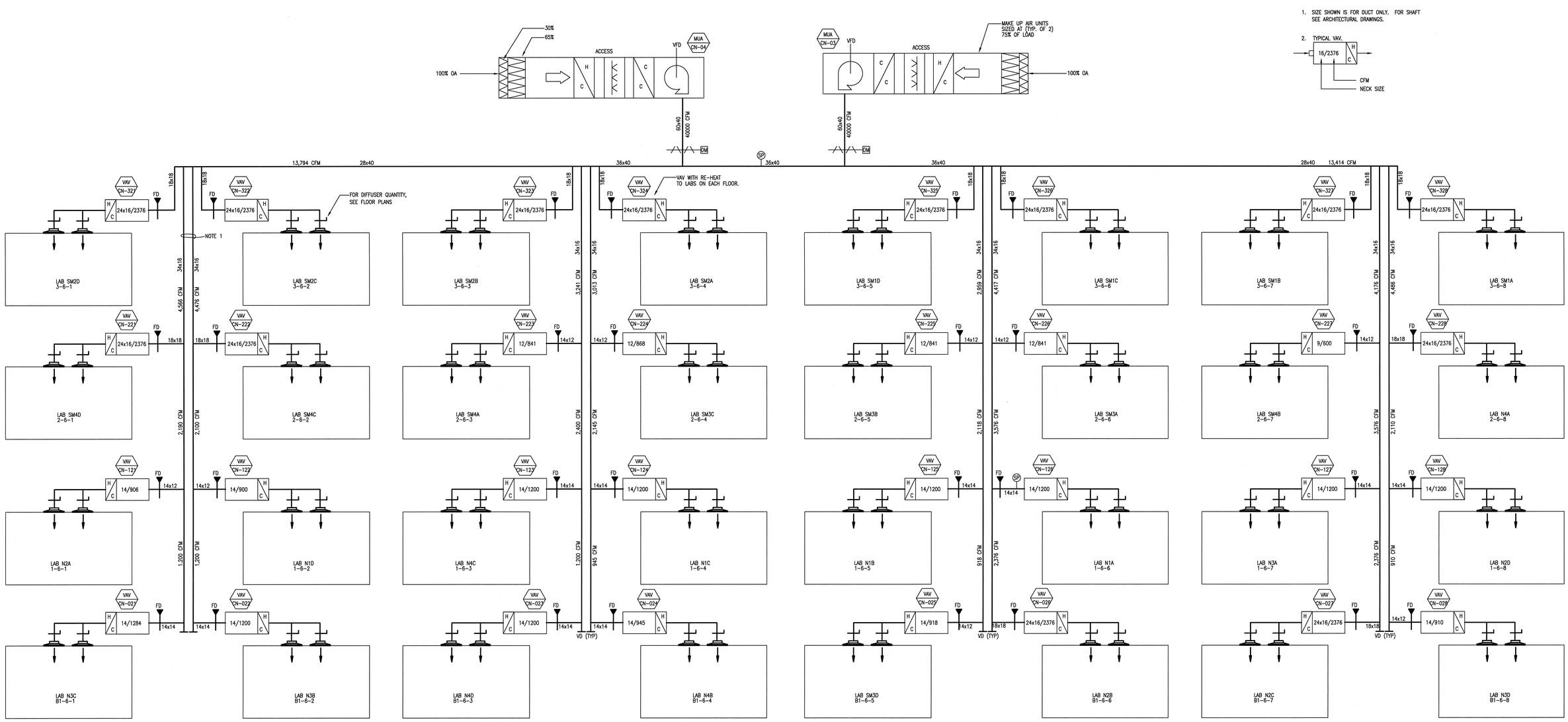

LAB MUA SUPPLY AIR FLOW DIAGRAM

SCALE: NONE HDG150002-8

NO REPRESENTATION OR WARRANTY, EXPRESSED OR IMPLIED, IS MADE AS TO THE ACCURACY, COMPLETENESS OR USEFULNESS OF THE INFORMATION OR STATEMENTS CONTAINED IN THESE DRAWINGS, OR THAT THE USE OR DISCLOSURE OF ANY INFORMATION, APPARATUS, METHOD, OR PROCESS DISCLOSED IN THESE DRAWINGS MAY NOT INFRINGE PRIVATE RIGHTS OF OTHERS. NO LIABILITY IS ASSUMED WITH RESPECT TO THE USE OF, OR FOR DAMAGES RESULTING FROM THE USE OF ANY INFORMATION, APPARATUS, METHOD, OR PROCESS DISCLOSED IN THESE DRAWINGS. DRAWINGS MADE AVAILABLE FOR INFORMATION TO BIDDER ARE NOT TO BE USED FOR OTHER PURPOSES AND ARE TO BE RETURNED UPON REQUEST OF THE FORWARDING CONTRACTOR.

NUMBER OF SECTION OR DETAIL
DRAWING ON WHICH SECTION OR DETAIL IS SHOWN OR TAKEN
SECTION AND DETAIL KEY

THIS DOCUMENT CONTROLLED BY
CHANGE CONTROL SYSTEM
ENGINEERING PROCEDURE

REV	CHANGE TYPE	CHANGE CONTROL SYSTEM	CHANGE REQUEST NUMBER	DESCRIPTION	DSN	CHK	DEPT	DATE	PE	DATE	PJ	DATE	REQ	DATE	UTB	DATE	RPE	RPE NO	DATE	ST	CV	EC	EE	EM	IE	M	PD	SE	AR
0				CERTIFIED FOR CONSTRUCTION – 12/9/02	JG	BWJ											BWJ	105869	12/9/02	BZ	AW	BWJ	AK	IM	DM	–	BWJ	–	TW

REVISION OR ISSUE PURPOSE — REVISION APPROVALS — SQUAD CHECK

RPE: BRUCE W. JOHNSON, REGISTERED ENGINEER, NO. 091815, STATE OF TENNESSEE

REV. 0 DATE 12/9/02

DRAWING APPROVALS: DSN, DRW, CHK, DEPT, PE CLG 12/4/02, PJ JS 12/3/02, REQ 12/4/03, UTB JRL

ORNL DRAWING NUMBER:

KnightJacobs Joint Venture
701 Scarboro Road, MS 8253
Oak Ridge, TN 37830
865-241-9433
fax 865-241-3400

m+w zander
M+W Zander U.S. Operations, Inc.
549 West Randolph Street
Chicago, IL 60661
Telephone: (312) 577-3200
Fax: (312) 577-3525

UT-BATTELLE
Oak Ridge National Laboratory
managed for the DEPARTMENT OF ENERGY under U.S. GOVERNMENT contract DE-AC05-00OR22725
UT-BATTELLE, LLC, ✶ Oak Ridge, Tennessee

PROJECT NAME:
CENTER FOR NANOPHASE MATERIALS SCIENCES

LAB MUA FLOW DIAGRAM

1	48	49	50	PLANT	BLDG	FL	SH.	OF	TYPE	CLASS
3	H	X	X	8	8610		1	1	D	U
51		52		53	A/E DRAWING NUMBER:					REV
NC		NA			H7.11.42					0

P:\DWG\U33231-CMS-Title-8100Sheet.dwg AutoCAD 2000 Plot Date: Friday, 12/20/03 - 3:40pm