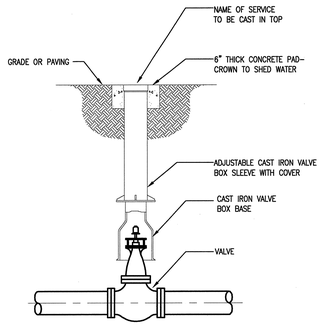

50 VALVE BOX
– NOT TO SCALE

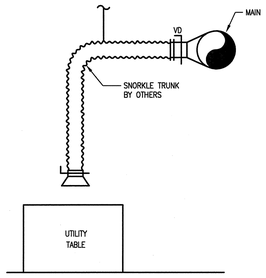

42 SNORKLE EXHAUST
– NOT TO SCALE

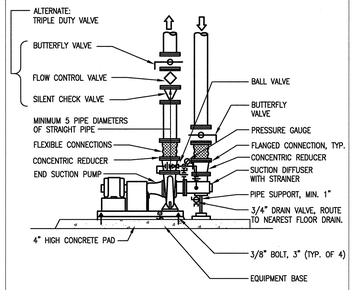

18 END SUCTION PUMP
– NOT TO SCALE

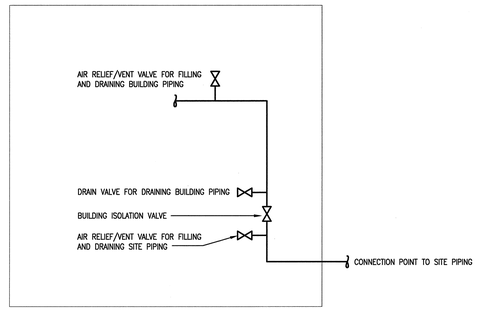

10 TYPICAL DRAIN/VENT PIPING INSTALLATION
– NOT TO SCALE

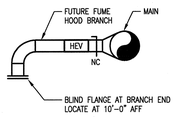

NOTE :
1. REFER TO THE FLOOR PLANS FOR DUCT SIZES AND LAYOUT

52 FUTURE FUME HOOD DUCT CONNECTION
– NOT TO SCALE

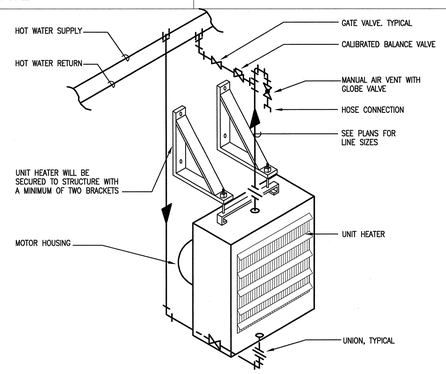

44 HOT WATER UNIT HEATER
– NOT TO SCALE

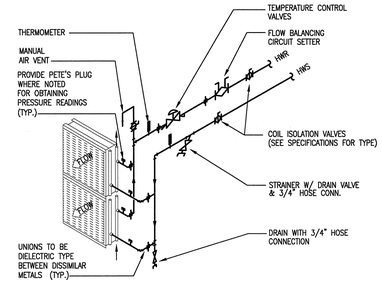

NOTE :
1. PROVIDE PIPE CLEARANCE FOR COIL REMOVAL.
2. SEE FLOOR PLAN FOR PIPE SIZES.
3. UNION OR FLANGE CONNECTION ON EACH SIDE OF CONTROL VALVE.
4. PROVIDE PIPE CLEARANCE FOR ALL CABINET ACCESS PANELS.

28 HOT WATER DOUBLE COIL PIPING - 2 WAY VALVE
– NOT TO SCALE

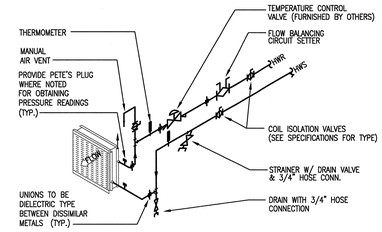

NOTE :
1. PROVIDE PIPE CLEARANCE FOR COIL REMOVAL.
2. SEE FLOOR PLAN FOR PIPE SIZES.
3. UNION OR FLANGE CONNECTION ON EACH SIDE OF CONTROL VALVE.
4. PROVIDE PIPE CLEARANCE FOR ALL CABINET ACCESS PANELS.

12 HOT WATER SINGLE COIL PIPING - 2 WAY VALVE
– NOT TO SCALE

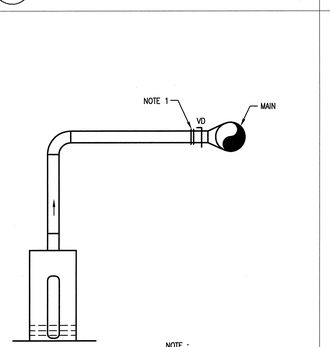

NOTE :
1. PROVIDE BLIND FLANGE IF CABINET IS NOT PRESENT AT THE TIME OF THE DUCT INSTALLATION.

54 GAS CABINET DUCT CONNECTION
– NOT TO SCALE

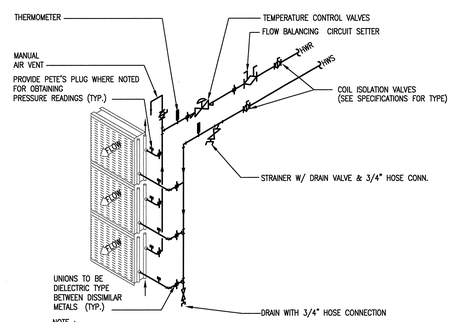

NOTE :
1. PROVIDE PIPE CLEARANCE FOR COIL REMOVAL.
2. SEE FLOOR PLAN FOR PIPE SIZES.
3. UNION OR FLANGE CONNECTION ON EACH SIDE OF CONTROL VALVE.
4. PROVIDE PIPE CLEARANCE FOR ALL CABINET ACCESS PANELS.

46 CHILLED WATER TRIPLE COIL PIPING - 2 WAY VALVE
– NOT TO SCALE

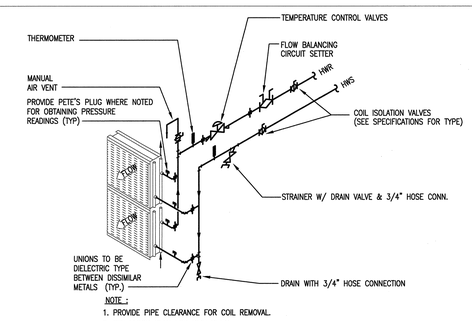

NOTE :
1. PROVIDE PIPE CLEARANCE FOR COIL REMOVAL.
2. SEE FLOOR PLAN FOR PIPE SIZES.
3. UNION OR FLANGE CONNECTION ON EACH SIDE OF CONTROL VALVE.
4. PROVIDE PIPE CLEARANCE FOR ALL CABINET ACCESS PANELS.

30 CHILLED WATER DOUBLE COIL PIPING - 2 WAY VALVE
– NOT TO SCALE

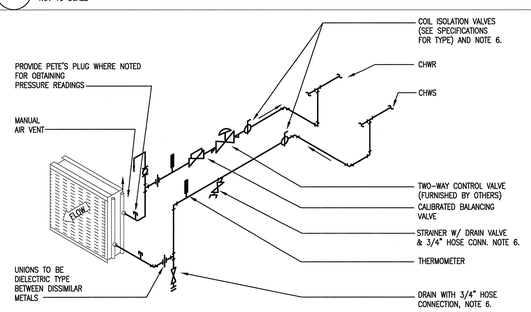

NOTE :
1. PROVIDE PIPE CLEARANCE FOR COIL REMOVAL.
2. SEE FLOOR PLAN FOR PIPE SIZES.
3. UNION OR FLANGE CONNECTION ON EACH SIDE OF CONTROL VALVE.
4. PROVIDE PIPE CLEARANCE FOR ALL CABINET ACCESS PANELS.

14 CHILLED WATER COIL PIPING - 2 WAY VALVE
– NOT TO SCALE

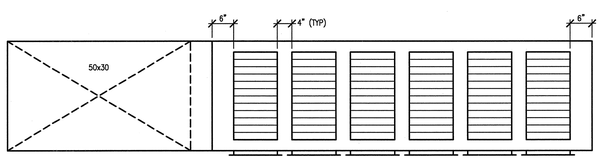

ELEVATION

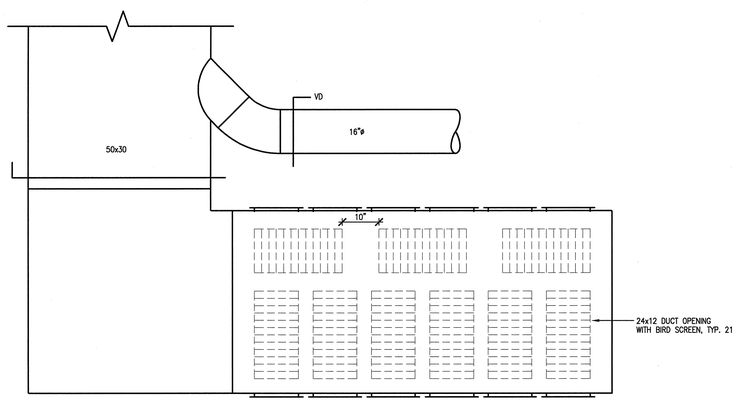

56 CLEANROOM MAKEUP AIR SUPPLY
SCALE: 3/4"=1'-0"

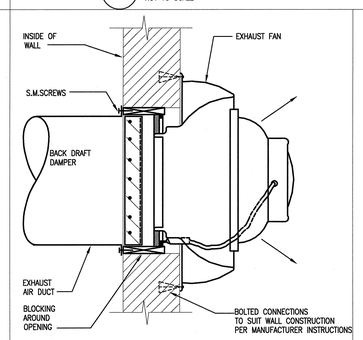

16 WALL EXHAUST FAN
– NOT TO SCALE

NO REPRESENTATION OR WARRANTY, EXPRESSED OR IMPLIED, IS MADE AS TO THE ACCURACY, COMPLETENESS OR USEFULNESS OF THE INFORMATION OR STATEMENTS CONTAINED IN THESE DRAWINGS, OR THAT THE USE OR DISCLOSURE OF ANY INFORMATION, APPARATUS, METHOD, OR PROCESS DISCLOSED IN THESE DRAWINGS MAY NOT INFRINGE PRIVATE RIGHTS OF OTHERS. NO LIABILITY IS ASSUMED WITH RESPECT TO THE USE OF, OR FOR DAMAGES RESULTING FROM THE USE OF ANY INFORMATION, APPARATUS, METHOD, OR PROCESS DISCLOSED IN THESE DRAWINGS. DRAWINGS MADE AVAILABLE FOR INFORMATION TO BIDDER ARE NOT TO BE USED FOR OTHER PURPOSES AND ARE TO BE RETURNED UPON REQUEST OF THE FORWARDING CONTRACTOR.

NUMBER OF SECTION OR DETAIL
DRAWING ON WHICH SECTION OR DETAIL IS SHOWN OR TAKEN
SECTION AND DETAIL KEY

THIS DOCUMENT CONTROLLED BY
CHANGE CONTROL SYSTEM
ENGINEERING PROCEDURE

REV	CHANGE TYPE	CHANGE CONTROL SYSTEM	CHANGE REQUEST NUMBER	DESCRIPTION	DSN	CHK	DEPT	DATE	PE	DATE	PJ	DATE	REQ	DATE	UTB	DATE	RPE	RPE NO	DATE	ST	CV	EC	EE	EM	IE	M	PD	SE	AR
0				CERTIFIED FOR CONSTRUCTION – 12/9/02	JG	BWJ				1/24/03		1/24/03	BWJ	1/24/03			BWJ	105869	12/9/02	BZ	AW	BWJ	AK	IM	DM	–	BWJ	–	TW
REVISION OR ISSUE PURPOSE								REVISION APPROVALS												SQUAD CHECK									

RPE
BRUCE W. JOHNSON REGISTERED ENGINEER COMMONWEALTH OF TENNESSEE 101070 STATE OF TENNESSEE
REV. 0 DATE 12/9/02 UTB JRL

DSN
DRW
CHK
DEPT
PE CLG 1/24/03
PJ JS 1/24/03
REQ 1/24/03

DRAWING APPROVALS

ORNL DRAWING NUMBER:

Knight/Jacobs Joint Venture
701 Scarboro Road, MS 8253
Oak Ridge, TN 37830
865-241-9433
fax 865-241-3400

m+w zander
M+W Zander U.S. Operations, Inc.
549 West Randolph Street
Chicago, IL 60661
Telephone: (312) 577-3200
Fax: (312) 577-3525

UT-BATTELLE
Oak Ridge National Laboratory
managed for the DEPARTMENT OF ENERGY under U.S. GOVERNMENT contract DE-AC05-00OR22725
UT-BATTELLE, LLC, ® Oak Ridge, Tennessee

PROJECT NAME:
CENTER FOR NANOPHASE MATERIALS SCIENCES
MECHANICAL DETAILS
CNMS LAB AND OFFICE AND CLEANROOM

1	48	49	50	PLANT	BLDG	FL	SH.	OF	TYPE	CLASS
3	H	X	X	8	8610		1	1	g	U
51		52		53	A/E DRAWING NUMBER:					REV
NC		NA			H6.11.41					0

AutoCAD