NEXT ASS'Y: FINAL ASS'Y:

CN-2MCC1 300A, 480V 3P, 3W "CLEANROOM – NORMAL POWER"

CIRCUIT NUMBER	LOAD: EQUIPMENT NUMBER	LOAD: NAME PLATE	LOAD: CONN. LOAD HP	LOAD: CONN. F.L. AMPS	LOAD: STANDBY F.L. AMPS	CIRCUIT BREAKER: # OF POLES	CIRCUIT BREAKER: FRAME SIZE	CIRCUIT BREAKER: TRIP	MOTOR CIRCUIT PROTECTOR (MCP) RATING	MOTOR STARTER: NEMA SIZE	MOTOR STARTER: OVERLOAD RELAY	MOTOR STARTER: INDICATOR LIGHT	MOTOR STARTER: AUX CONTACTS (N001) NO	AUX CONTACTS NC	MOTOR STARTER: CONTROL DEVICES	FEEDER CIRCUIT: FEEDER (AWG)	FEEDER CIRCUIT: GROUND WIRE (AWG)	FEEDER CIRCUIT: CONDUIT SIZE (INCH)	FEEDER CIRCUIT: LENGTH (FEET)	LOCAL SWITCH: DISC. SIZE (AMPS)	LOCAL SWITCH: FUSE AS REQD. (AMPS)	REMARKS
1	PV-CN-3A	PROCESS VAC PUMP	5	7.6		3	100	20	15	1	SOLID STATE	R-G-A	2	2	H-O-A	12	12	3/4		30	UNFUSED	
2	PV-CN-3B	PROC. VAC PUMP (STANDBY)	5	7.6	7.6	3	100	20	15	1	SOLID STATE	R-G-A	2	2	H-O-A	12	12	3/4		30	UNFUSED	
3	EF-CN-11	DI ROOM EF, RM B1-7-2	1	1.8		3	100	15	3	1	SOLID STATE	R-G-A	2	2	H-O-A	12	12	3/4		30	UNFUSED	
4	EF-CN-18	M-G SET EF, RM B1-7-12	3	4.8		3	100	15	7	1	SOLID STATE	R-G-A	2	2	H-O-A	12	12	3/4		30	UNFUSED	
5	AH-CN-15A	CR SUPPORT, SUPPLY FAN	10	14		3	100	40	30	1	SOLID STATE	R-G-A	2	2	H-O-A	12	12	3/4		30	UNFUSED	
6	AH-CN-15B	CR SUPPORT, RETURN FAN	7.5	11		3	100	30	15	1	SOLID STATE	R-G-A	2	2	H-O-A	12	12	3/4		30	UNFUSED	
7	EF-CN-19	TRANSFORMER RM B1-6-51	3	4.8		3	100	15	7	1	SOLID STATE	R-G-A	2	2	H-O-A	12	12	3/4		30	UNFUSED	
8	P-CN-01	CHILLED WATER PUMP	7.5	11		3	100	30	15	1	SOLID STATE	R-G-A	2	2	H-O-A	12	12	3/4		30	UNFUSED	
9	P-CN-02	CHILLED WATER PUMP (STANDBY)	7.5	11	11	3	100	30	15	1	SOLID STATE	R-G-A	2	2	H-O-A	12	12	3/4		30	UNFUSED	
10	–	SPARE				3	100	30	15	1	SOLID STATE	R-G-A	2	2	H-O-A					0	UNFUSED	
11	–	SPARE				3	100	30	15	1	SOLID STATE	R-G-A	2	2	H-O-A					0	UNFUSED	
12	P-CN-07	SWHR SYSTEM	3	4.8		3	100	15	7	1	SOLID STATE	R-G-A	2	2	H-O-A	12	12	3/4		30	UNFUSED	
13	P-CN-08	LAB PROCESS WASTE	1	1.8		3	100	15	3	1	SOLID STATE	R-G-A	2	2	H-O-A	12	12	3/4		30	UNFUSED	
14		SPACE																				
15		SPACE																				
16		SPACE																				
17		SPACE																				
18		SPACE																				
19		SPACE																				
20		SPACE																				
21		SPACE																				

TOTAL CONNECTED AMPS	80
25% LARGEST MOTOR AMPS	3.5
CODE MANDATED F.L. AMPS	84
20% FUTURE AMPS	17
MIN BUS SIZE REQ'D, AMPS	100

TOTAL CONNECTED F.L. AMPS	80
LESS STANDBY AMPS	-19
TOTAL DEMAND AMPS	62

STARTERS	TOTAL #
SIZE 1	13
SIZE 2	0
SIZE 3	0
SIZE 4	0
SIZE 5	0

KEYNOTES:

N001 AUX CONTACTS SHOWN IN MCC SCHEDULE ARE IN ADDITION TO THOSE REQUIRED FOR CONTROL FUNCTIONS.

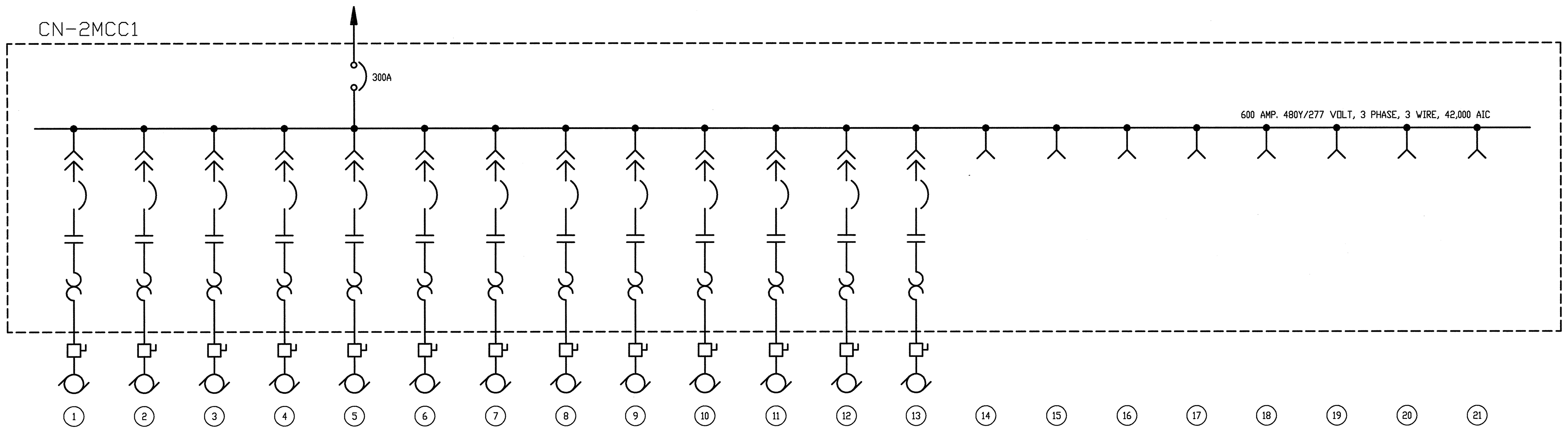

(INDOOR NEMA 1 ENCLOSURE)

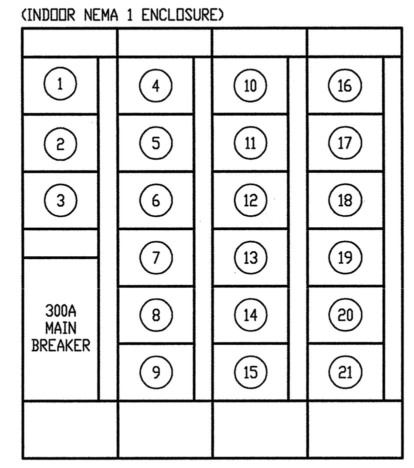

CN-2MCC1 ELEVATION

SCALE: NOT TO SCALE

CN-2MCC2 300A, 480V 3P, 3W "LABORATORY BLDG – NORMAL POWER"

CIRCUIT NUMBER	LOAD: EQUIPMENT NUMBER	LOAD: NAME PLATE	LOAD: LOAD HP	LOAD: F.L. AMPS	LOAD: STANDBY F.L. AMPS	CIRCUIT BREAKER: # OF POLES	CIRCUIT BREAKER: FRAME SIZE	CIRCUIT BREAKER: TRIP	MOTOR CIRCUIT PROTECTOR (MCP) RATING	MOTOR STARTER: NEMA SIZE	MOTOR STARTER: OVERLOAD RELAY	MOTOR STARTER: INDICATOR LIGHT	MOTOR STARTER: AUX CONTACTS (N001) NO	AUX CONTACTS NC	MOTOR STARTER: CONTROL DEVICES	FEEDER CIRCUIT: FEEDER (AWG)	FEEDER CIRCUIT: GROUND WIRE (AWG)	FEEDER CIRCUIT: CONDUIT SIZE (INCH)	FEEDER CIRCUIT: LENGTH (FEET)	LOCAL SWITCH: DISC. SIZE (AMPS)	LOCAL SWITCH: FUSE AS REQD. (AMPS)	REMARKS
1		ELEVATOR	50	65		3	225	110	100	3	SOLID STATE	R-G-A	2	2	H-O-A	4	8	1-1/2		100	UNFUSED	
2	EF-CN-08	BATH EXHAUST FAN	1	1.8		3	100	15	3	1	SOLID STATE	R-G-A	2	2	H-O-A	12	12	3/4		30	UNFUSED	
3	EF-CN-09	PENTHOUSE EXHAUST FAN	0.5	1.1		3	100	15	3	1	SOLID STATE	R-G-A	2	2	H-O-A	12	12	3/4		30	UNFUSED	
4	EF-CN-10	ELEV MACH RM EXHAUST FAN	0.5	1.1		3	100	15	3	1	SOLID STATE	R-G-A	2	2	H-O-A	12	12	3/4		30	UNFUSED	
5	AH-CN-16A	LAB OFFICE SUPPLY FAN	25	34		3	100	70	50	2						8	10	1		60	UNFUSED	VIA CN-2VFD19
6	AH-CN-16B	LAB OFFICE RETURN FAN	10	14		3	100	40	30	1						12	12	3/4		30	UNFUSED	VIA CN-2VFD20
7	AH-CN-17A	LAB OFFICE SUPPLY FAN	25	34		3	100	70	50	2						8	10	1		60	UNFUSED	VIA CN-2VFD21
8	AH-CN-17B	LAB OFFICE RETURN FAN	10	14		3	100	40	30	1						12	12	3/4		30	UNFUSED	VIA CN-2VFD22
9		SPACE																				
10		SPACE																				
11		SPACE																				
12		SPACE																				
13		SPACE																				
14		SPACE																				
15		SPACE																				

TOTAL CONNECTED AMPS	165
25% LARGEST MOTOR AMPS	16
CODE MANDATED F.L. AMPS	181
20% FUTURE AMPS	36
MIN BUS SIZE REQ'D, AMPS	218

TOTAL CONNECTED F.L. AMPS	165
LESS STANDBY AMPS	0
TOTAL DEMAND AMPS	165

STARTERS	TOTAL #
SIZE 1	5
SIZE 2	2
SIZE 3	1
SIZE 4	0
SIZE 5	0

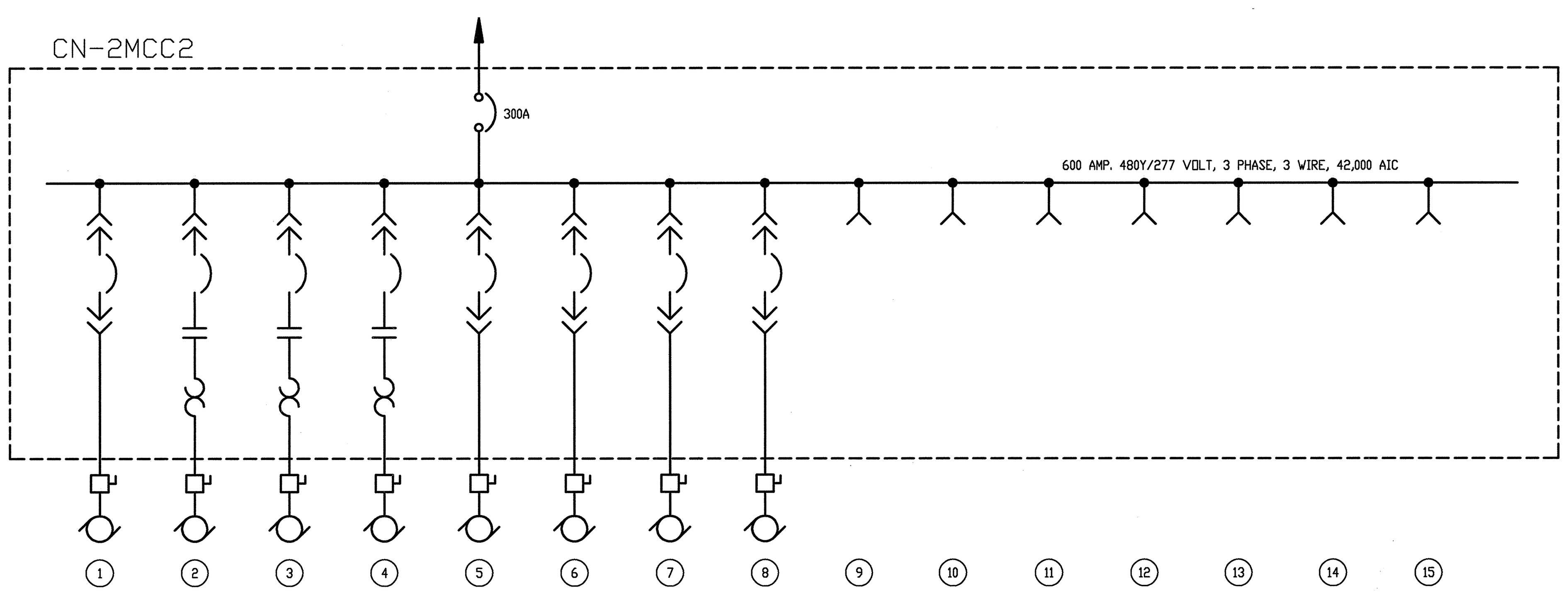

(INDOOR NEMA 1 ENCLOSURE)

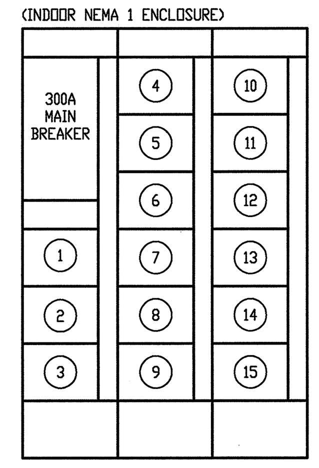

CN-2MCC2 ELEVATION

SCALE: NOT TO SCALE

NO REPRESENTATION OR WARRANTY, EXPRESSED OR IMPLIED, IS MADE AS TO THE ACCURACY, COMPLETENESS OR USEFULNESS OF THE INFORMATION OR STATEMENTS CONTAINED IN THESE DRAWINGS, OR THAT THE USE OR DISCLOSURE OF ANY INFORMATION, APPARATUS, METHOD, OR PROCESS DISCLOSED IN THESE DRAWINGS MAY NOT INFRINGE PRIVATE RIGHTS OF OTHERS. NO LIABILITY IS ASSUMED WITH RESPECT TO THE USE OF, OR FOR DAMAGES RESULTING FROM THE USE OF ANY INFORMATION, APPARATUS, METHOD, OR PROCESS DISCLOSED IN THESE DRAWINGS. DRAWINGS MADE AVAILABLE FOR INFORMATION TO BIDDER ARE NOT TO BE USED FOR OTHER PURPOSES AND ARE TO BE RETURNED UPON REQUEST OF THE FORWARDING CONTRACTOR.

NUMBER OF SECTION OR DETAIL — DRAWING ON WHICH SECTION OR DETAIL IS SHOWN OR TAKEN

SECTION AND DETAIL KEY

THIS DOCUMENT CONTROLLED BY

CHANGE CONTROL SYSTEM ______

ENGINEERING PROCEDURE ______

REV	CHANGE TYPE	CHANGE CONTROL SYSTEM	CHANGE REQUEST NUMBER	DESCRIPTION	DSN	CHK	DEPT	DATE	PE	DATE	PJ	DATE	REQ	DATE	UTB	DATE	RPE	RPE NO	DATE
0				CERTIFIED FOR CONSTRUCTION 12/9/02	CR	VGS			CLG	1/03	JS	1/03	KH	1/03			VGS	106009	

REVISION OR ISSUE PURPOSE — REVISION APPROVALS

ST	CV	EC	EE	EM	IE	M	PD	SE	AR
RZ	AW	BWJ	AK	IM	DM	–	BWJ	–	TW

SQUAD CHECK

RPE: VICTOR G. STEFFEN, REGISTERED ENGINEER, AGRICULTURE COMMERCE, No. 00106009, STATE OF TENNESSEE, 1-21-03

REV. 0 DATE 12/9/02

DSN	C. RUNNG	12/09/02
DRW	L. MAKOVSKY	12/09/02
CHK	V. STEFFEN	12/09/02
DEPT		
PE	CLG	1/24/03
PJ	JS	1/23/03
REQ		1/24/03
UTB		

DRAWING APPROVALS

ORNL DRAWING NUMBER:

Knight/Jacobs Joint Venture
701 Scarboro Road, MS 8253
Oak Ridge, TN 37830
865-241-9433
fax 865-241-3400

M+W Zander U.S. Operations, Inc.
549 West Randolph Street
Chicago, IL 60661
Telephone: (312) 577-3200
Fax: (312) 577-3525

UT-BATTELLE

Oak Ridge National Laboratory
managed for the DEPARTMENT OF ENERGY under
U.S. GOVERNMENT contract DE-AC05-00OR22725
UT-BATTELLE, LLC, © Oak Ridge, Tennessee

PROJECT NAME:

CENTER FOR NANOPHASE MATERIALS SCIENCES

MOTOR CONTROL CENTER DETAILS CN-2MCC1 & CN-2MCC2

1	48	49	50	PLANT	BLDG	FL	SH.	OF	TYPE	CLASS
3	E	X	X	8	8610		1	1	D	U

51	52	53	A/E DRAWING NUMBER:	REV
NC	NA		E9.13.40	0

AutoCAD P:\ORNL\LS0230.01-CNMS-Titel-II\0700-cadd\0726-electrical\E9-13-40.dwg @ 1/20/03 - 4:38pm