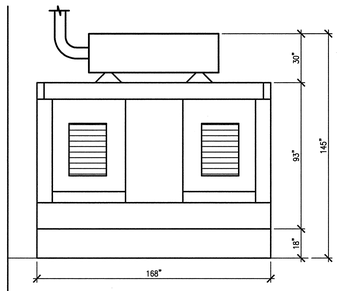

E / E8.11.45 DIESEL GENSET - ELEVATION
SCALE: NONE

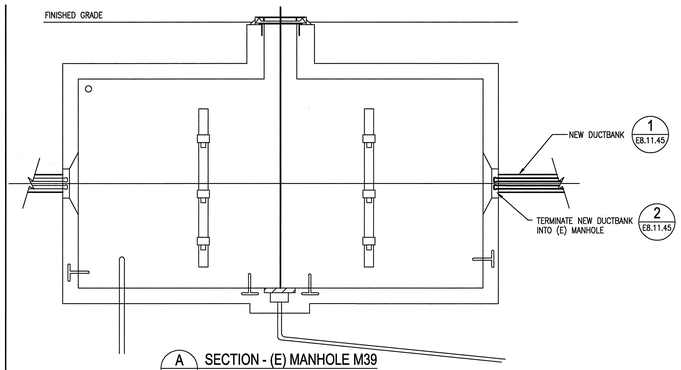

A / E1.00.41 SECTION - (E) MANHOLE M39
SCALE: NONE

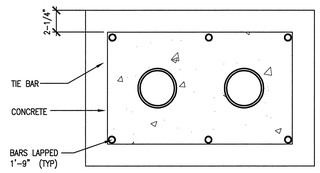

ALL LONGITUDINAL REINFORCING BARS SHALL BE NO. 5 ALL TIE BARS SHALL BE NO 3 WITH MAXIMUM SPACING = DUCT BANK HEIGHT MINUS 6 INCHES.

NOTES:

1. SPACE BETWEEN TWO ADJACENT CONDUITS IN DUCTBANK SHALL BE 2". SPACE BETWEEN CNDUIT FROM EDGE OF DUCTBANK SHALL BE 3".
2. NUMBER INSIDE CONDUIT REPRESENTS RADIAL FEED NUMBER.
3. "SP" INSIDE CONDUIT REPRESENTS SPARE CONDUIT.

1 / E8.11.45 REINFORCED DUCT BANK DETAIL
SCALE: NONE

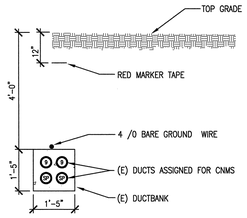

NOTES:

1. SPACE BETWEEN TWO ADJACENT CONDUITS IN DUCTBANK SHALL BE 2". SPACE BETWEEN CNDUIT FROM EDGE OF DUCTBANK SHALL BE 3".
2. NUMBER INSIDE CONDUIT REPRESENTS RADIAL FEED NUMBER.
3. "SP" INSIDE CONDUIT REPRESENTS SPARE CONDUIT.

B / E8.11.45 SECTION
SCALE: NONE

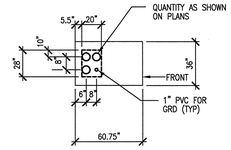

NOTES:

1. SPACE BETWEEN TWO ADJACENT CONDUITS IN DUCTBANK SHALL BE 2". SPACE BETWEEN CNDUIT FROM EDGE OF DUCTBANK SHALL BE 3".
2. NUMBER INSIDE CONDUIT REPRESENTS RADIAL FEED NUMBER.
3. "SP" INSIDE CONDUIT REPRESENTS SPARE CONDUIT.

3 / E8.11.45 TYP STUB-UP DETAIL - MVS SWITCH
SCALE: NONE

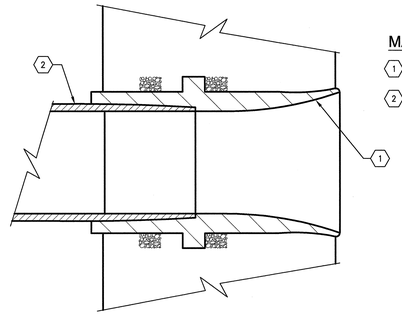

MATERIAL LIST

1. BELL END FITTINGS FOR 5" PVC CONDUIT, 'CARLON PRODUCTS' CAT #E297P.
2. CONDUIT, RIGID PVC, 5", 20 FT LENGTHS, HEAVY DUTY, MINIMUM WALL THICKNESS 0.126', 'CARLON PRODUCTS', P & C TYPE EB UTILITY DUCT, TC-8, CAT #58716.

2 / E8.11.45 TYP CONDUIT TERMINATION
SCALE: NONE

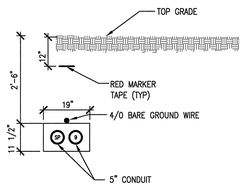

NOTES:

1. SPACE BETWEEN TWO ADJACENT CONDUITS IN DUCTBANK SHALL BE 2". SPACE BETWEEN CNDUIT FROM EDGE OF DUCTBANK SHALL BE 3".
2. NUMBER INSIDE CONDUIT REPRESENTS RADIAL FEED NUMBER.
3. "SP" INSIDE CONDUIT REPRESENTS SPARE CONDUIT.

D / E8.11.45 SECTION
SCALE: NONE

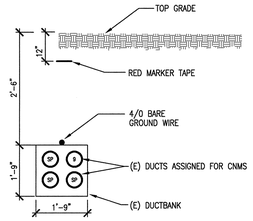

NOTES:

1. SPACE BETWEEN TWO ADJACENT CONDUITS IN DUCTBANK SHALL BE 2". SPACE BETWEEN CNDUIT FROM EDGE OF DUCTBANK SHALL BE 3".
2. NUMBER INSIDE CONDUIT REPRESENTS RADIAL FEED NUMBER.
3. "SP" INSIDE CONDUIT REPRESENTS SPARE CONDUIT.

C / E8.11.45 SECTION
SCALE: NONE

NO REPRESENTATION OR WARRANTY, EXPRESSED OR IMPLIED, IS MADE AS TO THE ACCURACY, COMPLETENESS OR USEFULNESS OF THE INFORMATION OR STATEMENTS CONTAINED IN THESE DRAWINGS, OR THAT THE USE OR DISCLOSURE OF ANY INFORMATION, APPARATUS, METHOD, OR PROCESS DISCLOSED IN THESE DRAWINGS MAY NOT INFRINGE PRIVATE RIGHTS OF OTHERS. NO LIABILITY IS ASSUMED WITH RESPECT TO THE USE OF, OR FOR DAMAGES RESULTING FROM THE USE OF ANY INFORMATION, APPARATUS, METHOD, OR PROCESS DISCLOSED IN THESE DRAWINGS. DRAWINGS MADE AVAILABLE FOR INFORMATION TO BIDDER ARE NOT TO BE USED FOR OTHER PURPOSES AND ARE TO BE RETURNED UPON REQUEST OF THE FORWARDING CONTRACTOR.

NUMBER OF SECTION OR DETAIL
DRAWING ON WHICH SECTION OR DETAIL IS SHOWN OR TAKEN
SECTION AND DETAIL KEY

THIS DOCUMENT CONTROLLED BY
CHANGE CONTROL SYSTEM
ENGINEERING PROCEDURE

REV	CHANGE TYPE	CHANGE CONTROL SYSTEM	CHANGE REQUEST NUMBER	DESCRIPTION	DSN	CHK	DEPT
0				CERTIFIED FOR CONSTRUCTION 12/9/02	CR	VGS	

REVISION OR ISSUE PURPOSE

DATE	PE	DATE	PU	DATE	REQ	DATE	UTB	DATE	RPE	RPE NO	DATE
12/9/02	12/9/02	12/9/02	12/9/02	12/9/02	12/9/02	12/9/02			VGS	106009	

REVISION APPROVALS

ST	CV	EC	EE	EM	IE	M	PD	SE	AR
RZ	AW	BWJ	AK	IM	DM	–	BWJ	–	TW

SQUAD CHECK

RPE

DSN	C. RUNNG	12/09/02
DRW	L. MAKOVSKY	12/09/02
CHK	V. STEFFEN	12/09/02
DEPT		
PE	CLG	12/23/02
PJ	JS	12/23/02
REQ		12/9/03
REV. 0	DATE 12/9/02	UTB

DRAWING APPROVALS

ORNL DRAWING NUMBER:

Knight/Jacobs Joint Venture
701 Scarboro Road, MS 8253
Oak Ridge, TN 37830
865-241-9433
fax 865-241-3400

m+w zander
M+W Zander U.S. Operations, Inc.
549 West Randolph Street
Chicago, IL 60661
Telephone: (312) 577-3200
Fax: (312) 577-3525

UT-BATTELLE
Oak Ridge National Laboratory
managed for the DEPARTMENT OF ENERGY under U.S. GOVERNMENT contract DE-AC05-000R22725
UT-BATTELLE, LLC. • Oak Ridge, Tennessee

PROJECT NAME:
CENTER FOR NANOPHASE MATERIALS SCIENCES
ELECTRICAL DETAILS

1	48	49	50	PLANT	BLDG	FL	SH.	OF	TYPE	CLASS
3	E	X	X	8	8610		1	1	D	U

51	52	53	A/E DRAWING NUMBER:	REV
NC	NA		E8.11.45	0

AutoCAD