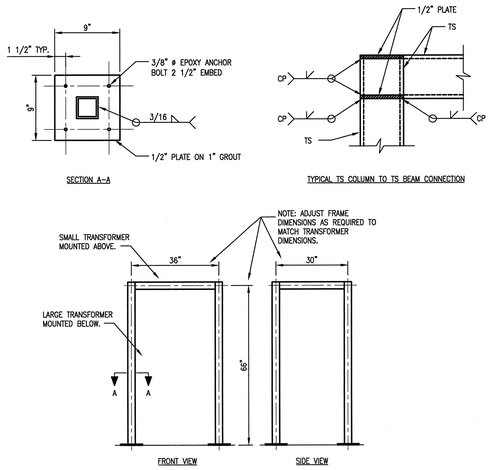

10 TRANSFORMER STACKING FRAME
NO SCALE

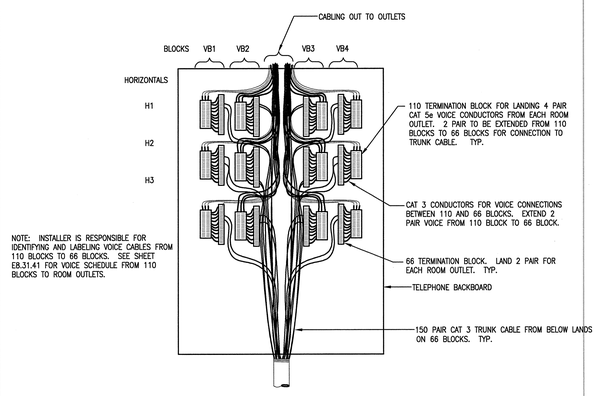

7 TELEPHONE BACKBOARD VOICE TERMINAL BLOCK ASSIGNMENTS

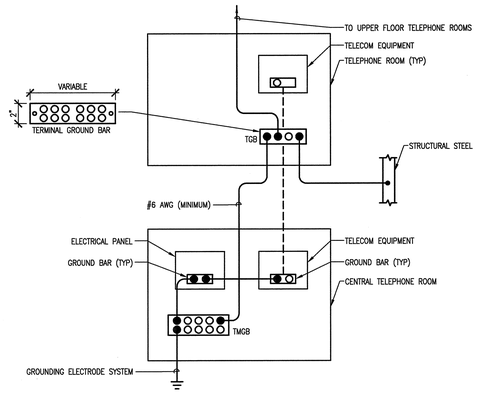

4 TELECOM SYSTEM GROUNDING

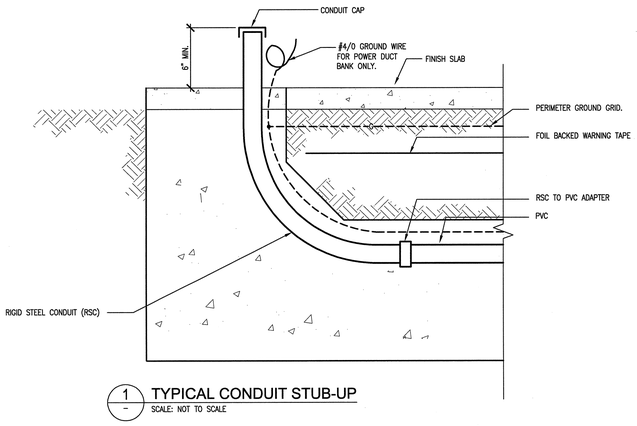

1 TYPICAL CONDUIT STUB-UP
SCALE: NOT TO SCALE

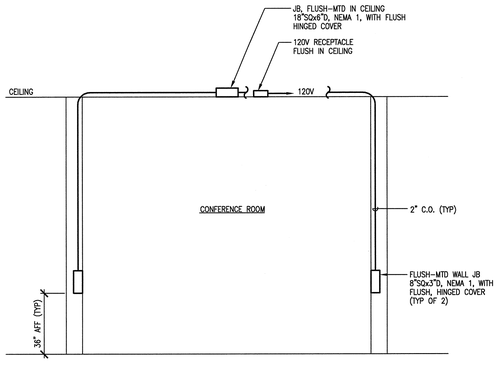

8 DETAIL - CEILING PROJECTOR PROVISIONS
NO SCALE

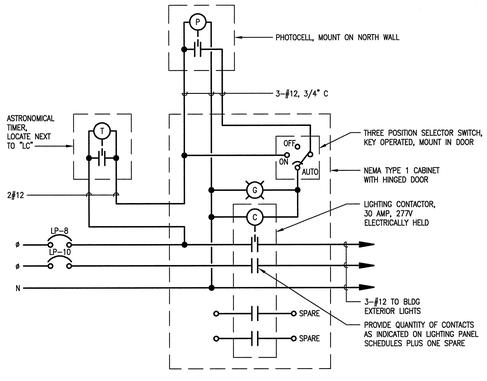

5 TYPICAL BUILDING EXTERIOR LIGHTING CONTROL CABINET "LC-X"
NO SCALE

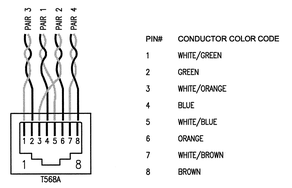

PIN#	CONDUCTOR COLOR CODE
1	WHITE/GREEN
2	GREEN
3	WHITE/ORANGE
4	BLUE
5	WHITE/BLUE
6	ORANGE
7	WHITE/BROWN
8	BROWN

2 8-POSITION MODULAR JACK PAIR ASSIGNMENTS FOR UTP

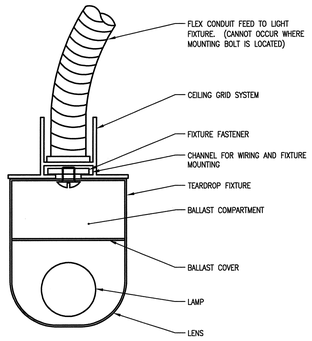

9 TYPICAL TEAR DROP LIGHT FIXTURE MOUNTING DETAIL
E8.11.43 NO SCALE

NOTE: LIGHT FIXTURE AND GRID SECTION ARE ONLY ONE POSSIBLE COMBINATION. COORDINATE ACTUAL GRID BEING PROVIDED AND ACTUAL LIGHT FIXTURE BEING PROVIDED TO ASSURE A COMPATIBLE COMBINATION IS PROVIDED THAT WILL MEET LIGHTING SYSTEM AND CLEANLINESS REQUIREMENTS.

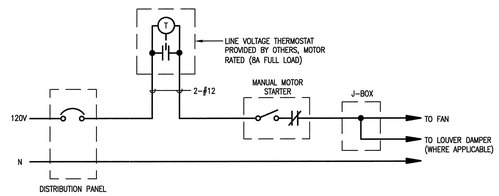

6 TYPICAL 120V FAN CONTROL DIAGRAM
NO SCALE

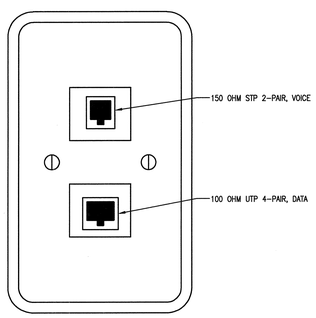

3 TELECOMMUNICATIONS OUTLET

NO REPRESENTATION OR WARRANTY, EXPRESSED OR IMPLIED, IS MADE AS TO THE ACCURACY, COMPLETENESS OR USEFULNESS OF THE INFORMATION OR STATEMENTS CONTAINED IN THESE DRAWINGS, OR THAT THE USE OR DISCLOSURE OF ANY INFORMATION, APPARATUS, METHOD, OR PROCESS DISCLOSED IN THESE DRAWINGS MAY NOT INFRINGE PRIVATE RIGHTS OF OTHERS. NO LIABILITY IS ASSUMED WITH RESPECT TO THE USE OF, OR FOR DAMAGES RESULTING FROM THE USE OF ANY INFORMATION, APPARATUS, METHOD, OR PROCESS DISCLOSED IN THESE DRAWINGS. DRAWINGS MADE AVAILABLE FOR INFORMATION TO BIDDER ARE NOT TO BE USED FOR OTHER PURPOSES AND ARE TO BE RETURNED UPON REQUEST OF THE FORWARDING CONTRACTOR.

NUMBER OF SECTION OR DETAIL
DRAWING ON WHICH SECTION OR DETAIL IS SHOWN OR TAKEN
SECTION AND DETAIL KEY

THIS DOCUMENT CONTROLLED BY
CHANGE CONTROL SYSTEM _____
ENGINEERING PROCEDURE _____

REV	CHANGE TYPE	CHANGE CONTROL SYSTEM	CHANGE REQUEST NUMBER	DESCRIPTION	DSN	CHK	DEPT
0	–	–	–	CERTIFIED FOR CONSTRUCTION 12/9/02	CR	VGS	

REVISION OR ISSUE PURPOSE

DATE	PE	DATE	PJ	DATE	REQ	DATE	UTB	DATE	RPE	RPE NO	DATE
12/9/02		1/23/03		1/23/03		1/23/03			VGS	106009	

REVISION APPROVALS

ST	CV	EC	EE	EM	IE	M	PD	SE	AR
RZ	AW	BWJ	AK	IM	DM	–	BWJ	–	TW

SQUAD CHECK

RPE
VICTOR G. STIFFEN REGISTERED PROFESSIONAL ENGINEER NO. 0010049 STATE OF TENNESSEE
REV. 0 DATE 12/9/02

DSN	C. RUNNG	12/09/02
DRW	L. MAKOVSKY	12/09/02
CHK	V. STEFFEN	12/09/02
DEPT		
PE	CLG	1/24/03
PJ	JS	1/23/03
REQ		1/24/03
UTB		

DRAWING APPROVALS

ORNL DRAWING NUMBER:

KnightJacobs Joint Venture
701 Scarboro Road, MS 8253
Oak Ridge, TN 37830
865-241-9433
fax 865-241-3400

m+w zander
M+W Zander U.S. Operations, Inc.
549 West Randolph Street
Chicago, IL 60661
Telephone: (312) 577-3200
Fax: (312) 577-3625

UT-BATTELLE
Oak Ridge National Laboratory
managed for the DEPARTMENT OF ENERGY under U.S. GOVERNMENT contract DE-AC05-00OR22725
UT-BATTELLE, LLC. • Oak Ridge, Tennessee

PROJECT NAME:
CENTER FOR NANOPHASE MATERIALS SCIENCES
GENERAL ELECTRICAL DETAILS

1	48	49	50	PLANT	BLDG	FL	SH.	OF	TYPE	CLASS
3	E	X	X	8	8610		1	1	P	U
51		52		53	A/E DRAWING NUMBER:					REV
NC		NA			E8.11.43					0

Date: 02/15/2002 Time: 15:55:04
File: P:\ORNL\1.1023.D.01 - CNMS - Clean - 8700.dwg
Dwg: J:\SLDPRWORK\TD\9908\106_2600\WBS_DR\WS_PLOT\A2-01-01.DWG
AutoCAD