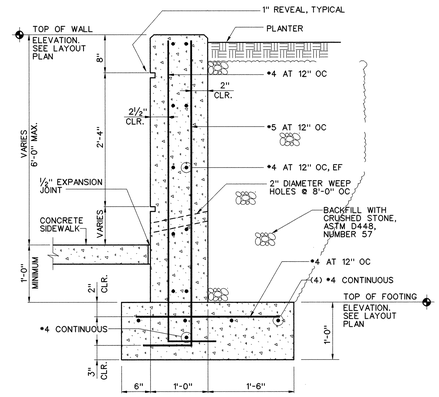

A SECTION
C1.52.01 C1.52.02
SCALE : 1" = 1'-0"

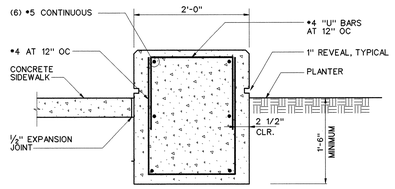

B SECTION
C1.52.01 C1.52.02
SCALE : 1" = 1'-0"

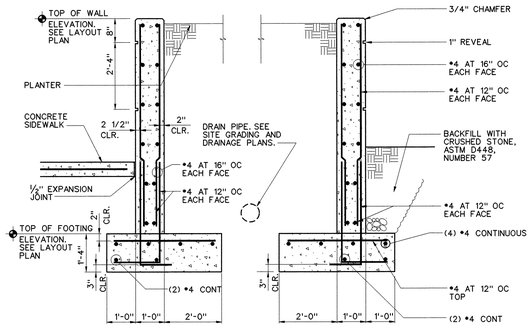

C SECTION
C1.52.02
SCALE : 1/2" = 1'-0"

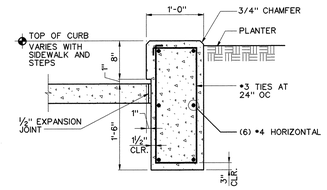

D SECTION
C1.52.01
SCALE : 1" = 1'-0"

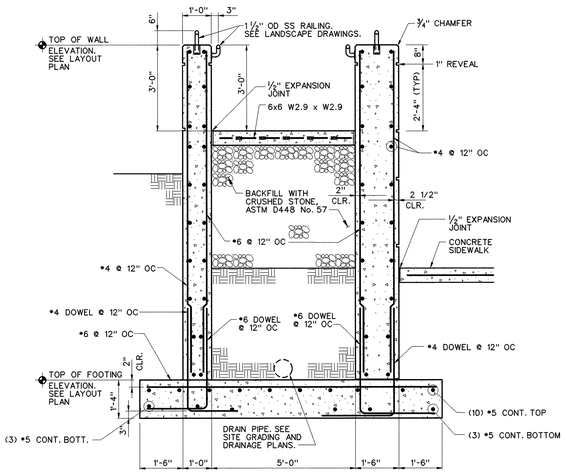

E SECTION
C1.52.02
SCALE : 1/2" = 1'-0"

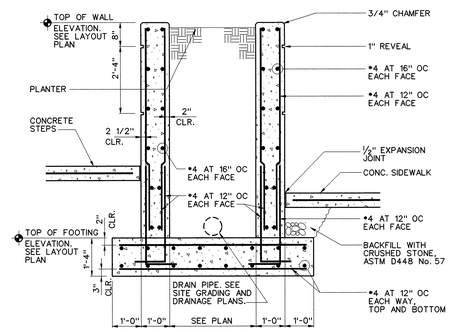

F SECTION
C1.52.01 C1.52.02
SCALE : 1/2" = 1'-0"

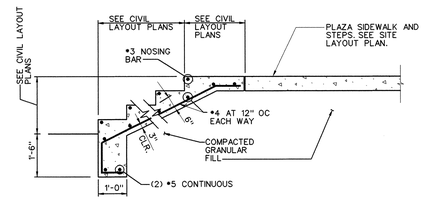

G SECTION
C1.52.01
SCALE : 1/2" = 1'-0"

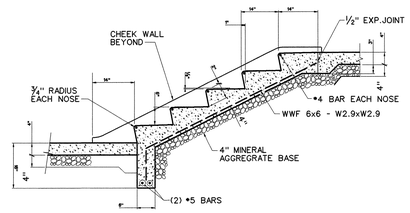

STAIR SECTION

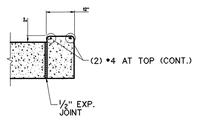

CHEEK WALL SECTION

H STAIR DETAIL
C1.52.02
NTS

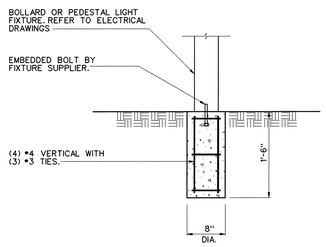

1 DETAIL
C2.52.01
SCALE : 1" = 1'-0"

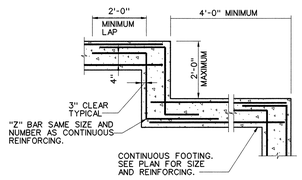

2 TYPICAL STEP FOOTING DETAIL
C2.52.01
NTS

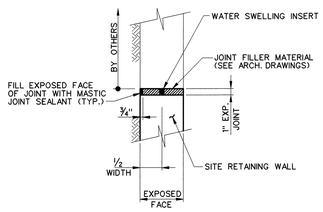

3 TYPICAL WALL JOINT DETAIL
C2.52.01
NTS

SCALE 1" = 1'-0"

SCALE: 1/2" = 1'-0"

ORNL DRAWING NUMBER: 108031400-C8E-8600-A029

KnightLiacobs Joint Venture
701 Scarboro Road, MS 8253
Oak Ridge, TN 37830
865-241-9433
fax 865-241-3400

BWSC
BARGE WAGGONER SUMNER & CANNON, INC.
ENGINEERS ARCHITECTS PLANNERS
LANDSCAPE ARCHITECTS AND SURVEYORS

NO REPRESENTATION OR WARRANTY, EXPRESSED OR IMPLIED, IS MADE AS TO THE ACCURACY, COMPLETENESS OR USEFULNESS OF THE INFORMATION OR STATEMENTS CONTAINED IN THESE DRAWINGS, OR THAT THE USE OR DISCLOSURE OF ANY INFORMATION, APPARATUS, METHOD, OR PROCESS DISCLOSED IN THESE DRAWINGS MAY NOT INFRINGE PRIVATE RIGHTS OF OTHERS. NO LIABILITY IS ASSUMED WITH RESPECT TO THE USE OF, OR FOR DAMAGES RESULTING FROM THE USE OF ANY INFORMATION, APPARATUS, METHOD, OR PROCESS DISCLOSED IN THESE DRAWINGS. DRAWINGS MADE AVAILABLE FOR INFORMATION TO BIDDER ARE NOT TO BE USED FOR OTHER PURPOSES AND ARE TO BE RETURNED UPON REQUEST OF THE FORWARDING CONTRACTOR.

NUMBER OF SECTION OR DETAIL
DRAWING ON WHICH SECTION OR DETAIL IS SHOWN OR TAKEN
SECTION AND DETAIL KEY

THIS DOCUMENT CONTROLLED BY
CHANGE CONTROL SYSTEM _____
ENGINEERING PROCEDURE _____

REV	CHANGE TYPE	CHANGE CONTROL SYSTEM	CHANGE REQUEST NUMBER	DESCRIPTION (REVISION OR ISSUE PURPOSE)	DSN	CHK	DEPT	DATE	PE	DATE	PJ	DATE	REQ	DATE	UTB	DATE	RPE	RPE NO	DATE	ST	CV	EC	EE	EM	IE	M	PD	SE	AR
0				CERTIFIED FOR CONSTRUCTION - 12/9/2002	BKM	AW			1/24/03		1/23/03		12/17/02				BKM	19600	12/9	RZ	BN	BWJ	AK	IM	DM	–	BWJ	–	TW

REVISION APPROVALS — SQUAD CHECK

RPE: BRIAN KETRON MAHONEY, REGISTERED ENGINEER, No. 19600, STATE OF TENNESSEE

REV.	DATE
0	12-9-02

DSGN	B. MAHONEY	12/09/02
DRW	J. BALES	12/09/02
CHKR	A. WYLIE	12/09/02
SECT		
DEPT		
PE		1/24/03
PJ		1/23/03
REQ		12/17/02
UTB		

DRAWING APPROVALS

UT-BATTELLE
Oak Ridge National Laboratory
managed for the DEPARTMENT OF ENERGY under U.S. GOVERNMENT contract DE-AC05-00OR22725
UT-BATTELLE, LLC. • Oak Ridge, Tennessee

PROJECT NAME:
CENTER FOR NANOPHASE MATERIALS SCIENCES
RETAINING WALL SECTIONS AND DETAIL

1	48	49	50	PLANT	BLDG	FL	SH.	OF	TYPE	CLASS
3	C	X	X	8	8610	X	1	1	S	U
51		52		53						REV
NC		NA		IN						0

A/E DRAWING NUMBER: DRAWING NUMBER C2.52.01

12/05/02 11:33:00 AM
f:\ens\700_C400\TASK_01\B7740_Plot\c2_52_01.dgn