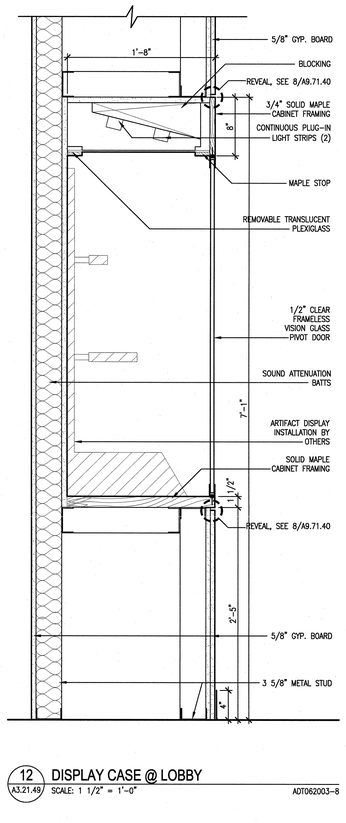

12 A3.21.49 DISPLAY CASE @ LOBBY
SCALE: 1 1/2" = 1'-0" ADT062003-8

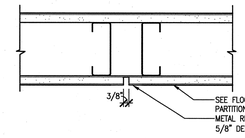

7 A9.71.40 VERTICAL REVEAL @ GYP BD
SCALE: 3" = 1' - 0" ADT092093-8

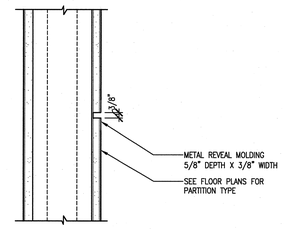

8 A9.71.40 HORIZONTAL REVEAL @ GYP BD
SCALE: 3" = 1' - 0" ADT092094-8

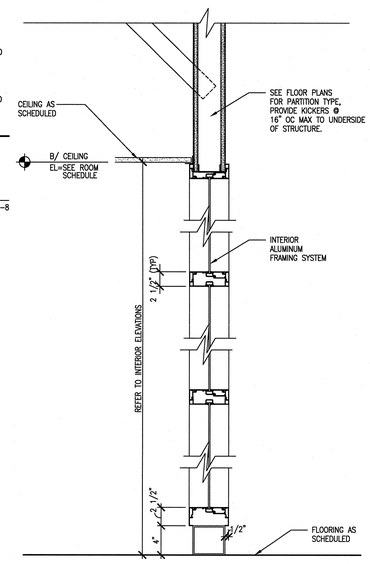

9 A9.71.40 DETAIL- INTERIOR ALUM FRAME WINDOW
SCALE: 1 1/2"=1'-0" ADT081000-8

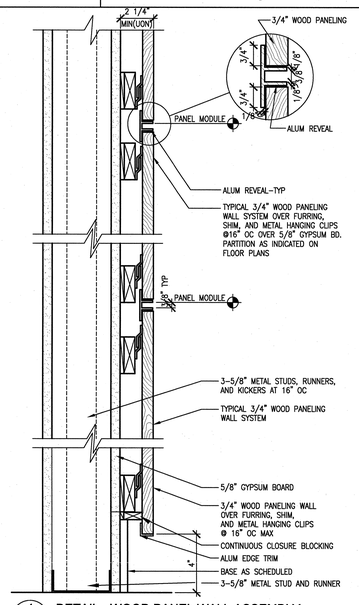

4 A9.71.40 DETAIL - WOOD PANEL WALL ASSEMBLY
SCALE: 3"=1'-0" ADT064001-8

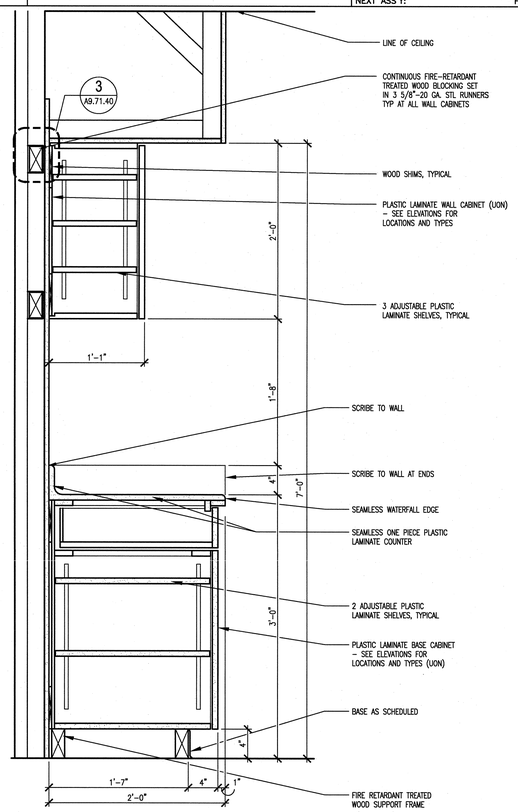

1 A9.71.40 TYPICAL CABINET SECTION
SCALE: 1-1/2"=1'-0" ADT062002-8

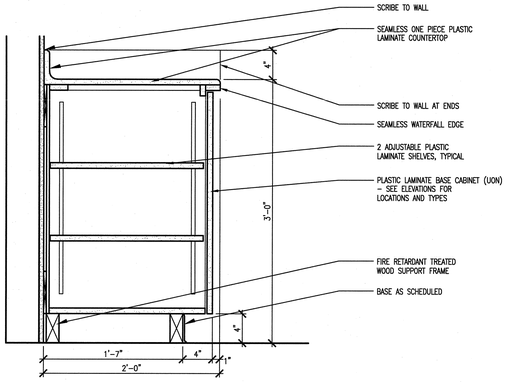

2 A9.71.40 DETAIL - CABINET SECTION
SCALE: 1-1/2"=1'-0" ADT062001-8

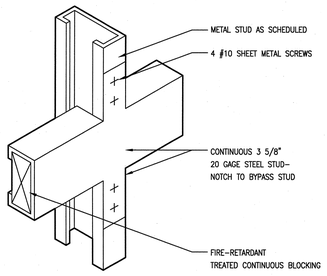

3 A9.71.40 DETAIL - TYPICAL BLOCKING
SCALE: 3"=1'-0" ADT061001-8

6" 5" 4" 3" 2" 1" 0 6" 1'
SCALE: 3" = 1'-0"

1' 9" 6" 3" 0 1' 2'
SCALE: 1-1/2" = 1'-0"

ORNL DRAWING NUMBER:

Knight/Jacobs Joint Venture
701 Scarboro Road, MS 8253
Oak Ridge, TN 37830
865-241-9433
fax 865-241-3400

m•w zander
M+W Zander U.S. Operations, Inc.
549 West Randolph Street
Chicago, IL 60661
Telephone: (312) 577-3200
Fax: (312) 577-3525

UT-BATTELLE
Oak Ridge National Laboratory
managed for the DEPARTMENT OF ENERGY under U.S. GOVERNMENT contract DE-AC05-00OR22725
UT-BATTELLE, LLC, in Oak Ridge, Tennessee

NO REPRESENTATION OR WARRANTY, EXPRESSED OR IMPLIED, IS MADE AS TO THE ACCURACY, COMPLETENESS OR USEFULNESS OF THE INFORMATION OR STATEMENTS CONTAINED IN THESE DRAWINGS, OR THAT THE USE OR DISCLOSURE OF ANY INFORMATION, APPARATUS, METHOD, OR PROCESS DISCLOSED IN THESE DRAWINGS MAY NOT INFRINGE PRIVATE RIGHTS OF OTHERS. NO LIABILITY IS ASSUMED WITH RESPECT TO THE USE OF, OR FOR DAMAGES RESULTING FROM THE USE OF ANY INFORMATION, APPARATUS, METHOD, OR PROCESS DISCLOSED IN THESE DRAWINGS. DRAWINGS MADE AVAILABLE FOR INFORMATION TO BIDDER ARE NOT TO BE USED FOR OTHER PURPOSES AND ARE TO BE RETURNED UPON REQUEST OF THE FORWARDING CONTRACTOR.

NUMBER OF SECTION OR DETAIL
DRAWING ON WHICH SECTION OR DETAIL IS SHOWN OR TAKEN
SECTION AND DETAIL KEY

THIS DOCUMENT CONTROLLED BY
CHANGE CONTROL SYSTEM
ENGINEERING PROCEDURE

REV	CHANGE FORM	CHANGE CONTROL SYSTEM	CHANGE REQUEST NUMBER	DESCRIPTION	DSN	CHK	DEPT
0				CERTIFIED FOR CONSTRUCTION-12/9/02	CF	ED	

REVISION OR ISSUE PURPOSE

DATE	PE	DATE	PJ	DATE	REQ	DATE	UTB	DATE	RPE	RPE NO	DATE
	1/6/03	1/03		1/03		1/03			RLB	102104	12/9/02

REVISION APPROVALS

ST	CV	EC	EE	EM	IE	M	PD	SE	AR
RZ	AW	BWJ	AK	IM	DM	--	BWJ	--	TW

SQUAD CHECK

RPE
ROBERT L. BARNES, REGISTERED ARCHITECT, REGISTERED NO. 102104, STATE OF TENNESSEE
12/09/02
REV. DATE

DSN	C. FINFROCK	12/9/02
DRW	I-W WANG	12/9/02
CHK	E. DENSON	12/9/02
DEPT		
PE	CLO	1/24/03
PJ	JS	1/23/03
REQ		1/24/03
UTB	JRL	

DRAWING APPROVALS

PROJECT NAME:
CENTER FOR NANOPHASE MATERIALS SCIENCES
CASEWORK DETAILS

1	48	49	50	PLANT	BLDG	FL	SH.	OF	TYPE	CLASS
3	A	X	X	8	8610		1	1	P	U
51		52		53	A/E DRAWING NUMBER:					REV
NC		NA			A9.71.40					0

Date: 12/17/2002 Time: 14:21:24
User name: 6MX0W
Drawing: V:\CLEPROJECTS\7000\700_OMSR\700K_SB\140_PLOT\A9-00-4G2MD
AutoCAD