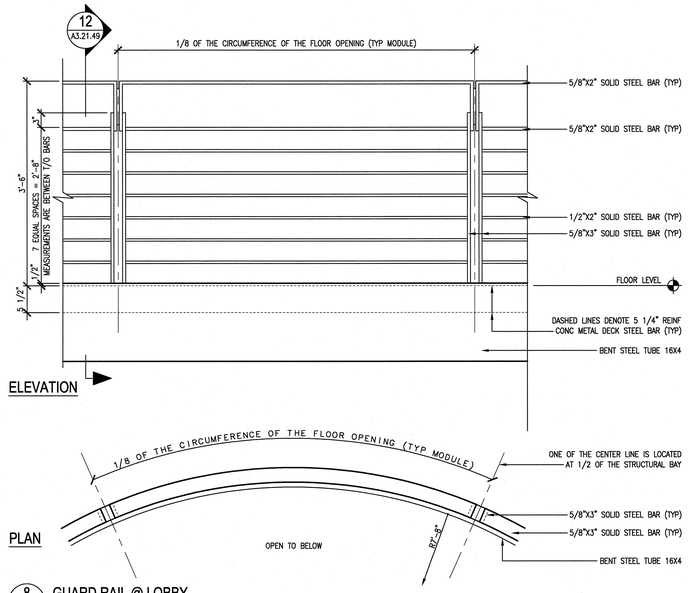

8 A3.21.49 GUARD RAIL @ LOBBY
SCALE: 1"=1'-0"
ADT055002-8

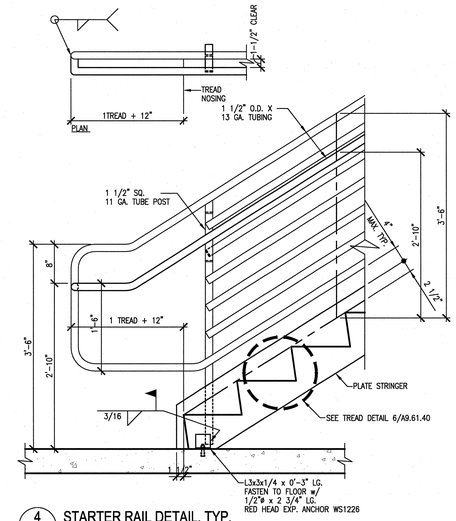

4 A5.31.40 STARTER RAIL DETAIL, TYP.
SCALE: 1"=1'-0"
ADT055005-8

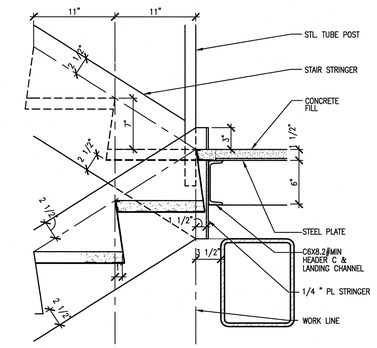

1 A5.31.40 INTERMEDIATE LANDING FRAME STRINGER CONNECTION
SCALE: 1 1/2"=1'-0"
ADT055004-8

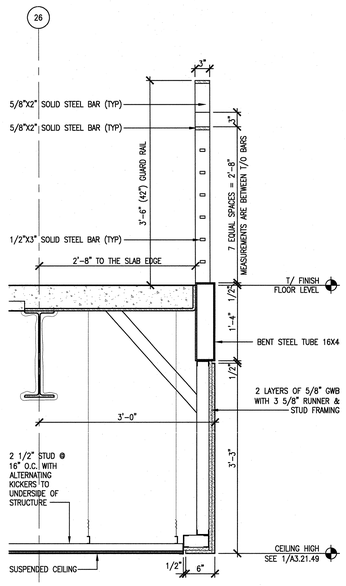

20 A3.21.49 GUARD RAIL @ THEORY AREA
SCALE: 1"=1'-0"
ADT055006-8

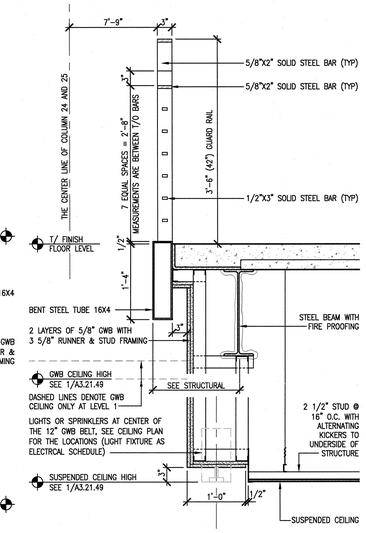

12 A3.21.49 GUARD RAIL @ LOBBY
SCALE: 1"=1'-0"
ADT055001-8

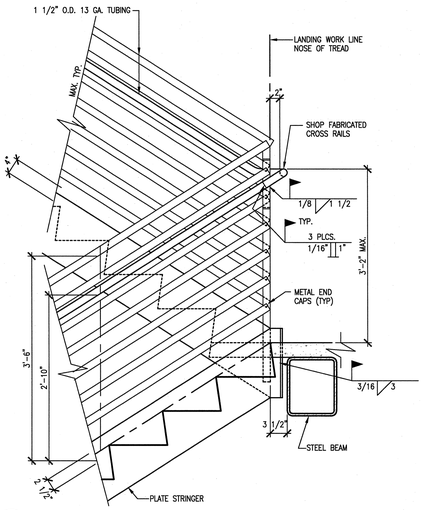

5 A5.31.40 LANDING RAIL DETAIL, TYP.
SCALE: 1"=1'-0"
ADT055008-8

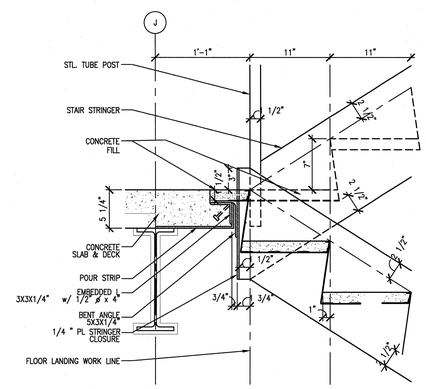

2 A5.31.40 PLATE STRINGER CONNECTION
SCALE: 1 1/2"=1'-0"
ADT055003-8

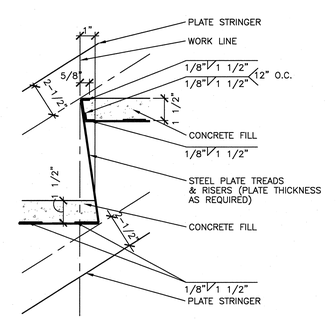

6 A5.31.40 TYPICAL TREAD DETAIL
SCALE: 3"=1'-0"
ADT055012-8

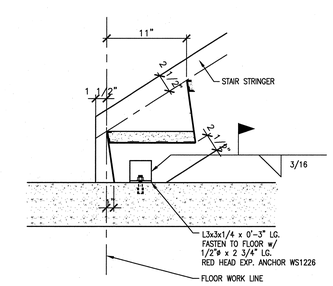

3 A5.31.40 FLOOR SLAB STRINGER CONNECTION
SCALE: 1 1/2"=1'-0"
ADT055023-8

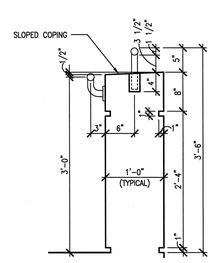

22 A3.41.48 HAND & GUARDRAIL DETAIL
SCALE: 1"=1'-0"
ADT033015-8

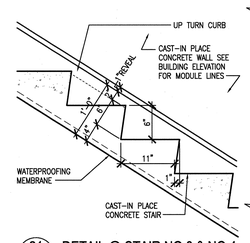

21 A5.31.41 DETAIL @ STAIR NO.3 & NO.4
SCALE: 1"=1'-0"
ADT033016-8

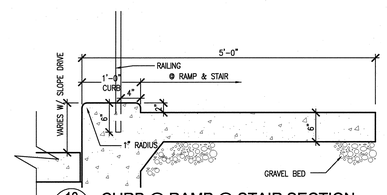

13 A5.31.41 CURB @ RAMP @ STAIR SECTION
SCALE: 1" = 1'- 0"
ADT033011-8

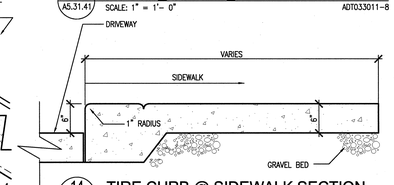

14 A5.31.41 TIRE CURB @ SIDEWALK SECTION
SCALE: 1" = 1'- 0"
ADT033011-8

SCALE: 3" = 1'-0"

SCALE: 1-1/2" = 1'-0"

SCALE 1" = 1'-0"

ORNL DRAWING NUMBER:

Knight/Jacobs Joint Venture
701 Scarboro Road, MS 8253
Oak Ridge, TN 37830
865-241-9433
fax 865-241-3400

M+W Zander U.S. Operations, Inc.
549 West Randolph Street
Chicago, IL 60661
Telephone: (312) 577-3200
Fax: (312) 577-3525

Oak Ridge National Laboratory
managed for the DEPARTMENT OF ENERGY under U.S. GOVERNMENT contract DE-AC05-00OR22725
UT-BATTELLE, LLC. < Oak Ridge, Tennessee

PROJECT NAME:
CENTER FOR NANOPHASE MATERIALS SCIENCES
INTERIOR STAIR, RAILING & ELEVATOR DETAILS

1	48	49	50	PLANT	BLDG	FL	SH.	OF	TYPE	CLASS
3 A		X	X	8	8610		1	1	P	U
51		52		53	A/E DRAWING NUMBER: A9.61.40				REV 0
NC		NA							

DSN	C. FINFROCK	12/9/02	
DRW	I-W WANG	12/9/02	
CHK	E. DENSON	12/9/02	
DEPT			
PE	CLG	12/9/02	
PJ	JS	12/23/02	
REQ		1/14/03	
UTB	JRL		

RPE: ROBERT L. BARNES, REGISTERED ARCHITECT, REG. NO. 102104, STATE OF TENNESSEE — 12/09/02

REV.	DATE

DRAWING APPROVALS

REV	CHANGE TYPE	CHANGE CONTROL SYSTEM	CHANGE CONTROL NUMBER	DESCRIPTION	DSN	CHK	DEPT	DATE	PE	DATE	PJ	DATE	REQ	DATE	UTB	DATE	RPE	RPE NO	DATE
0				CERTIFIED FOR CONSTRUCTION-12/9/02	CF	ED											RLB	102104	12/9/02

REVISION OR ISSUE PURPOSE — REVISION APPROVALS

ST	CV	EC	EE	EM	IE	M	PD	SE	AR
RZ	AW	BWJ	AK	IM	DM	---	BWJ	---	TW

SQUAD CHECK

THIS DOCUMENT CONTROLLED BY
CHANGE CONTROL SYSTEM
ENGINEERING PROCEDURE

NUMBER OF SECTION OR DETAIL
DRAWING ON WHICH SECTION OR DETAIL IS SHOWN OR TAKEN
SECTION AND DETAIL KEY

NO REPRESENTATION OR WARRANTY, EXPRESSED OR IMPLIED, IS MADE AS TO THE ACCURACY, COMPLETENESS OR USEFULNESS OF THE INFORMATION OR STATEMENTS CONTAINED IN THESE DRAWINGS, OR THAT THE USE OR DISCLOSURE OF ANY INFORMATION, APPARATUS, METHOD, OR PROCESS DISCLOSED IN THESE DRAWINGS MAY NOT INFRINGE PRIVATE RIGHTS OF OTHERS. NO LIABILITY IS ASSUMED WITH RESPECT TO THE USE OF, OR FOR DAMAGES RESULTING FROM THE USE OF ANY INFORMATION, APPARATUS, METHOD, OR PROCESS DISCLOSED IN THESE DRAWINGS. DRAWINGS MADE AVAILABLE FOR INFORMATION TO BIDDER ARE NOT TO BE USED FOR OTHER PURPOSES AND ARE TO BE RETURNED UPON REQUEST OF THE FORWARDING CONTRACTOR.

AutoCAD
Date: 12/17/2002 Time: 14:21:24
Username: NBW08