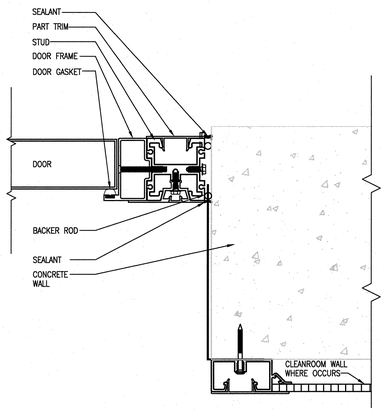

15 CLEANROOM DOOR @ CONCRETE JAMB/HEAD SIM
6"=1'-0" AKWS09-8

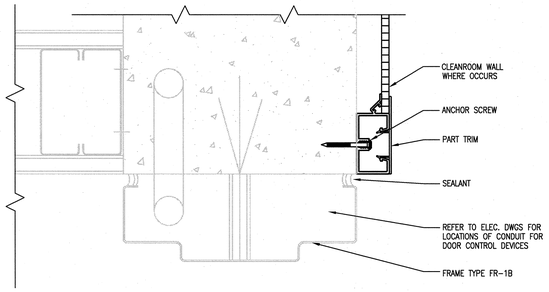

16 HEAD @ CONCRETE WALL
6"=1'-0" AKWS09-8

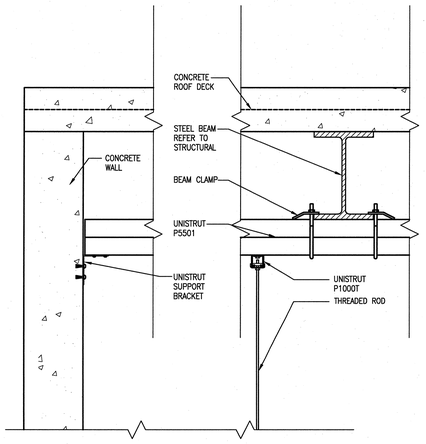

17 UNISTRUT CONNECTION TO PURLINS
A9.42.41 1-1/2" = 1' AKWS09-8

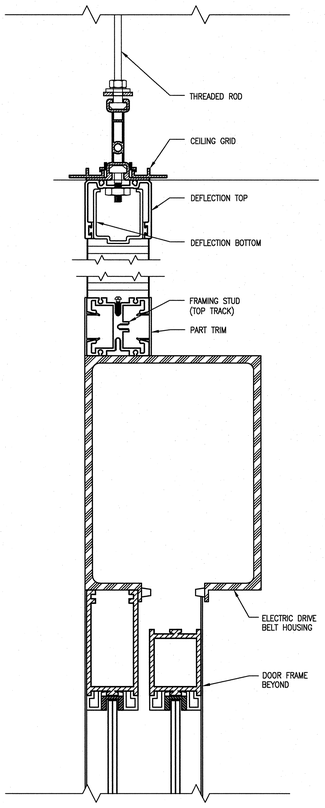

12 HEAD AT AUTOMATIC DOOR
6"=1'-0" AKWS09-8

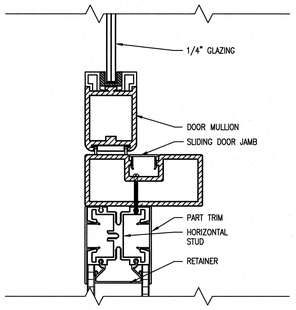

13 JAMB AT AUTOMATIC DOOR
6"=1'-0" AKWS09-8

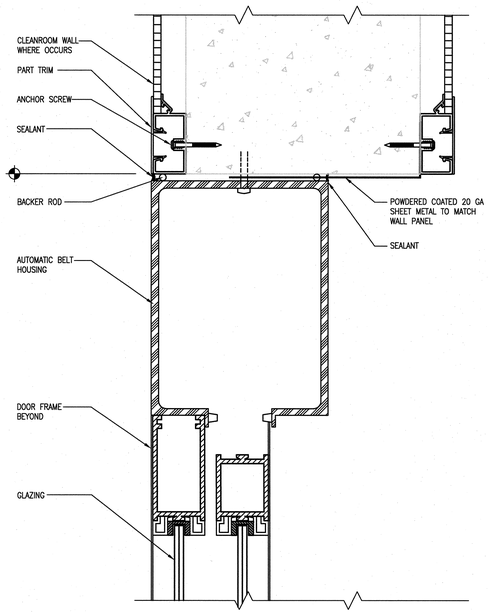

9 JAMB AUTOMATIC DOOR AND CONCRETE
6"=1'-0" AKWS09-8

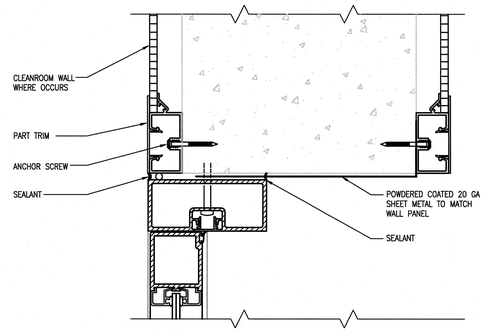

10 JAMB AT AUTOMATIC DOOR AND CONCRETE
6"=1'-0" AKWS09-8

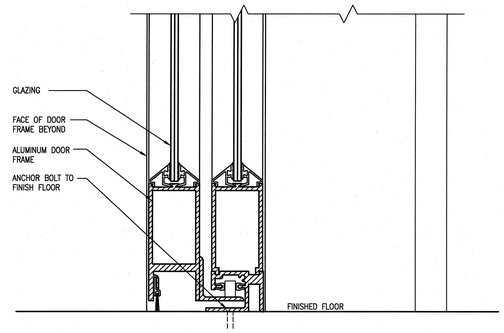

11 THRESHOLD AT AUTOMATIC DOOR
6"=1'-0" AKWS09-8

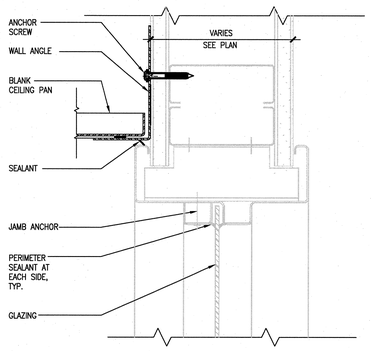

5 WINDOW HEADER
6"=1'-0" AKWS09-8

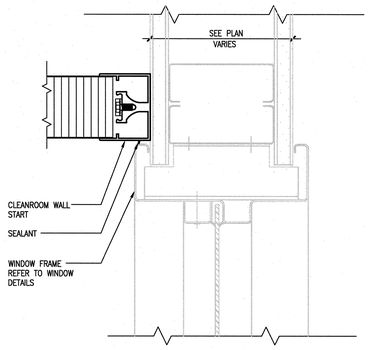

6 WINDOW JAMB
6"=1'-0" AKWS09-8

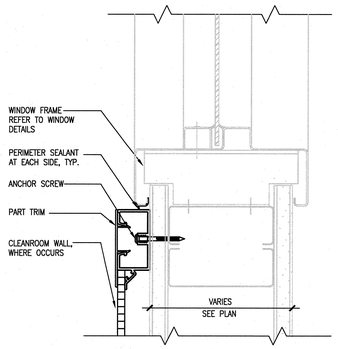

7 WINDOW SILL
6"=1'-0" AKWS09-8

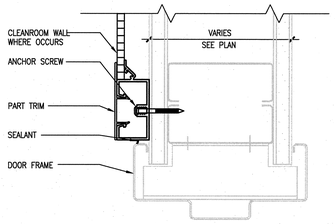

8 JAMB/HEAD TYPICAL
6"=1'-0" AKWS09-8

NO REPRESENTATION OR WARRANTY, EXPRESSED OR IMPLIED, IS MADE AS TO THE ACCURACY, COMPLETENESS OR USEFULNESS OF THE INFORMATION OR STATEMENTS CONTAINED IN THESE DRAWINGS, OR THAT THE USE OR DISCLOSURE OF ANY INFORMATION, APPARATUS, METHOD, OR PROCESS DISCLOSED IN THESE DRAWINGS MAY NOT INFRINGE PRIVATE RIGHTS OF OTHERS. NO LIABILITY IS ASSUMED WITH RESPECT TO THE USE OF, OR FOR DAMAGES RESULTING FROM THE USE OF ANY INFORMATION, APPARATUS, METHOD, OR PROCESS DISCLOSED IN THESE DRAWINGS. DRAWINGS MADE AVAILABLE FOR INFORMATION TO BIDDER ARE NOT TO BE USED FOR OTHER PURPOSES AND ARE TO BE RETURNED UPON REQUEST OF THE FORWARDING CONTRACTOR.

NUMBER OF SECTION OR DETAIL
DRAWING ON WHICH SECTION OR DETAIL IS SHOWN OR TAKEN
SECTION AND DETAIL KEY

THIS DOCUMENT CONTROLLED BY
CHANGE CONTROL SYSTEM
ENGINEERING PROCEDURE

REV	CHANGE TYPE	CHANGE CONTROL SYSTEM	CHANGE REQUEST NUMBER	DESCRIPTION	DSN	CHK	DEPT
0				CERTIFIED FOR CONSTRUCTION – 12/9/02	BKE	TG	

REVISION OR ISSUE PURPOSE

DATE	PE	DATE	PJ	DATE	REQ	DATE	UTB	DATE	RPE	RPE NO	DATE
	1/24/03		1/24/03		1/24/03						12/9/02

REVISION APPROVALS

RZ	AW	BMJ	AK	IM	DM		BWJ		TW
ST	CV	EC	EE	EM	IE	M	PD	SE	AR

SQUAD CHECK

RPE
ROBERT L. BARNES
REGISTERED ARCHITECT
NO. 102125
STATE OF TENNESSEE
12/09/02

REV.	DATE	UTB

DRAWING APPROVALS

DSN	B. RAMSEY
DRW	B. EDGERTON
CHK	T. GRANT
DEPT	
PE	1/24/03
PJ	1/24/03
REQ	1/24/03

ORNL DRAWING NUMBER:

Knight/Jacobs Joint Venture
701 Scarboro Road, MS 8253
Oak Ridge, TN 37830
865-241-9433
fax 865-241-3400

M+W Zander U.S. Operations, Inc.
549 West Randolph Street
Chicago, IL 60661
Telephone: (312) 577-3200
Fax: (312) 577-3525

Oak Ridge National Laboratory
managed for the DEPARTMENT OF ENERGY under
U.S. GOVERNMENT contract DE-AC05-00OR22725
UT-BATTELLE, LLC. = Oak Ridge, Tennessee

PROJECT NAME:
CENTER FOR NANOPHASE MATERIALS SCIENCES
CLEANROOM
INTERIOR CEILING DETAILS

1	48	49	50	PLANT	BLDG	FL	SH.	OF	TYPE	CLASS
3	A	X	X	8	8610		1	1		U
51		52		53	A/E DRAWING NUMBER:					REV
NC		NA			A9.42.41					0

AutoCAD