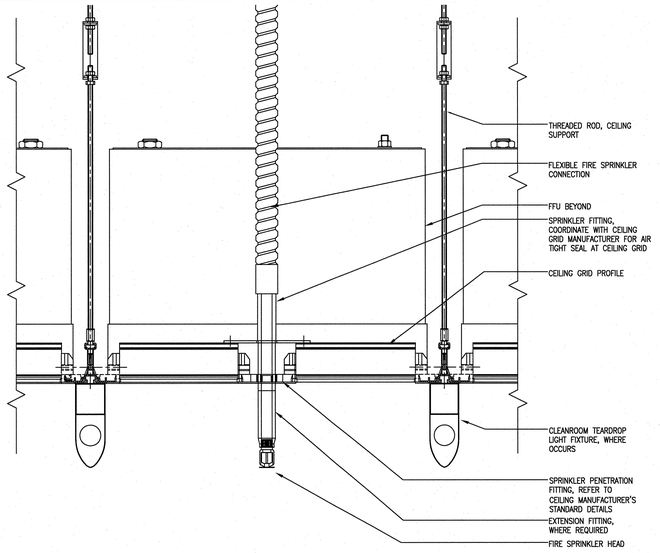

8 A9.42.40 FIRE SPRINKLER CEILING PENETRATION 3"= 1' AKWS09-8

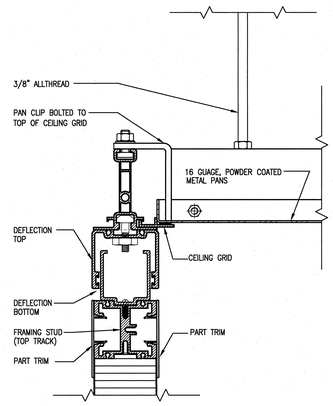

6 A9.42.40 PAN CEILING / WALL CONNECTION 6" = 1' AKWS09-8

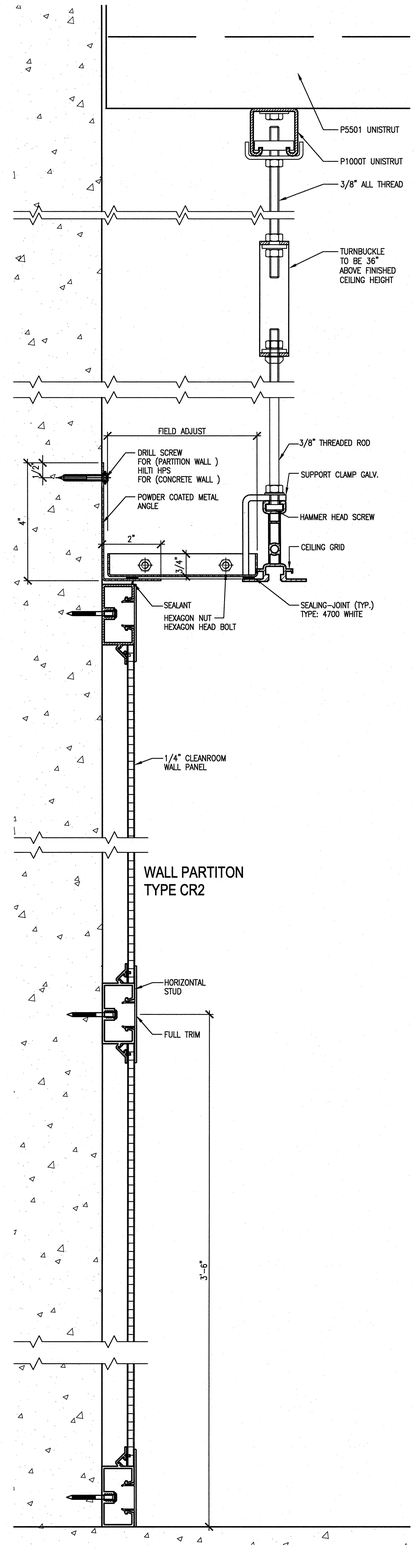

WALL PARTITON TYPE CR2

3 A9.42.40 CLEANROOM WALL SECTION 6" = 1' AKWS09-8

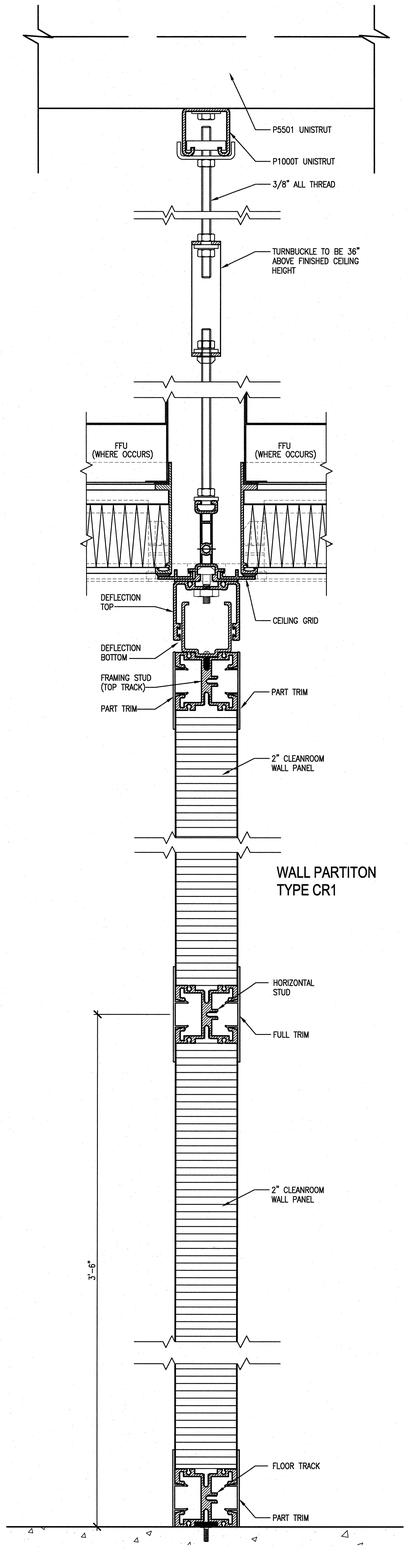

WALL PARTITON TYPE CR1

2 A9.42.40 CLEANROOM WALL SECTION 6" = 1' AKWS09-8

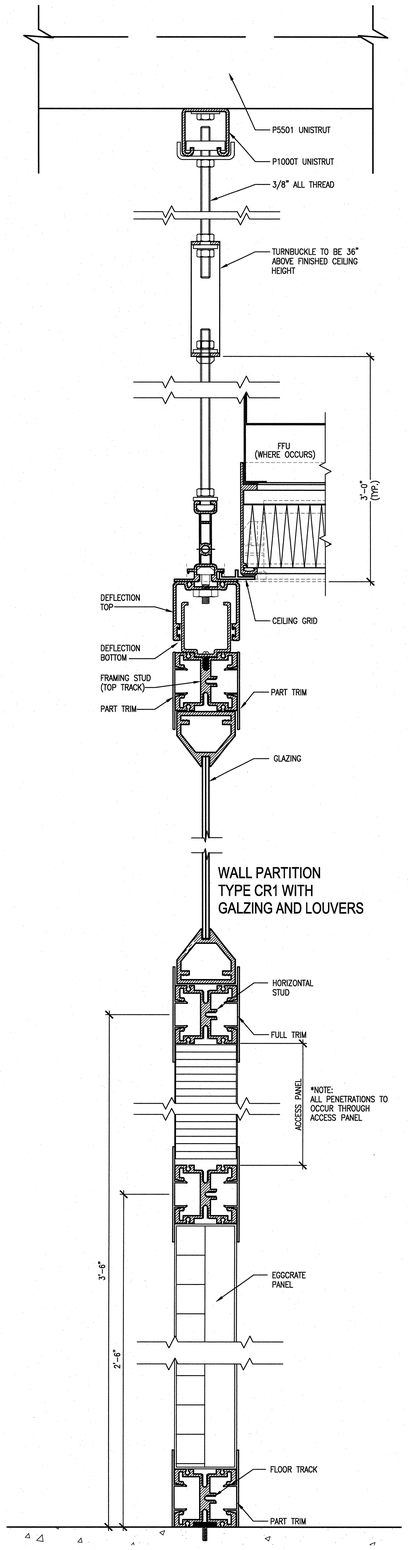

WALL PARTITION TYPE CR1 WITH GALZING AND LOUVERS

1 A9.42.40 CLEANROOM WALL SECTION 6" = 1' AKWS09-8

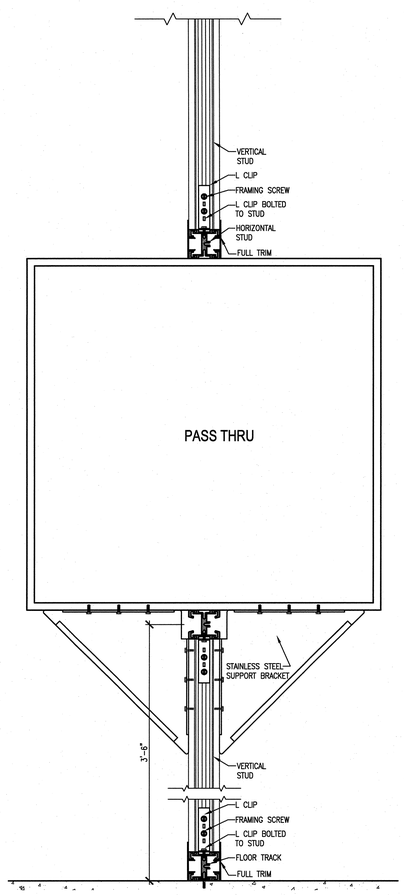

7 A9.42.40 PASS-THRU SUPPORT 3"= 1' AKWS09-8

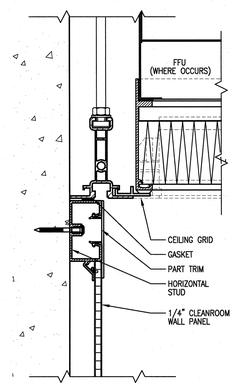

5 A9.42.40 EDGE CONDITION AT CEILING TYPICAL 6"= 1' AKWS09-8

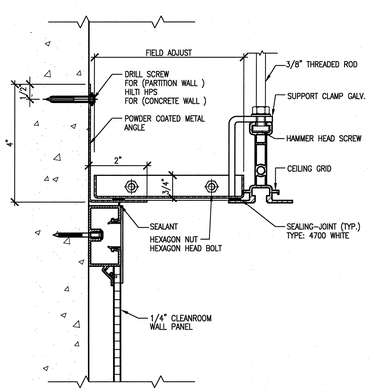

4 A9.42.40 EDGE CONDITION AT CEILING TYPICAL 6"= 1' AKWS09-8

NO REPRESENTATION OR WARRANTY, EXPRESSED OR IMPLIED, IS MADE AS TO THE ACCURACY, COMPLETENESS OR USEFULNESS OF THE INFORMATION OR STATEMENTS CONTAINED IN THESE DRAWINGS, OR THAT THE USE OR DISCLOSURE OF ANY INFORMATION, APPARATUS, METHOD, OR PROCESS DISCLOSED IN THESE DRAWINGS MAY NOT INFRINGE PRIVATE RIGHTS OF OTHERS. NO LIABILITY IS ASSUMED WITH RESPECT TO THE USE OF, OR FOR DAMAGES RESULTING FROM THE USE OF ANY INFORMATION, APPARATUS, METHOD, OR PROCESS DISCLOSED IN THESE DRAWINGS. DRAWINGS MADE AVAILABLE FOR INFORMATION TO BIDDER ARE NOT TO BE USED FOR OTHER PURPOSES AND ARE TO BE RETURNED UPON REQUEST OF THE FORWARDING CONTRACTOR.

NUMBER OF SECTION OR DETAIL — DRAWING ON WHICH SECTION OR DETAIL IS SHOWN OR TAKEN

SECTION AND DETAIL KEY

THIS DOCUMENT CONTROLLED BY

CHANGE CONTROL SYSTEM _____

ENGINEERING PROCEDURE _____

REV	CHANGE TYPE	CHANGE CONTROL SYSTEM	CHANGE REQUEST NUMBER	DESCRIPTION	DSN	CHK	DEPT	DATE	PE	DATE	RQ	DATE	REQ	DATE	UTB	DATE	RPE	RPE NO	DATE	ST	CV	EC	EE	EM	IE	M	PD	SE	AR
0				CERTIFIED FOR CONSTRUCTION – 12/9/02	BKE	TG			1/3/03		1/3/03		1/3/03						12/9/02	RZ	AW	BMJ	AK	IM	DM		BMJ		TW

REVISION OR ISSUE PURPOSE — REVISION APPROVALS — SQUAD CHECK

RPE: ROBERT L. BARNES, REGISTERED ARCHITECT, NO. 102103, STATE OF TENNESSEE — 12/09/02

DSN	B. RAMSEY	
DRW	B. EDGERTON	
CHK	T. GRANT	
DEPT		
PE		1/3/03
RQ		1/3/03
REQ		1/3/03
UTB		

REV. DATE — DRAWING APPROVALS

ORNL DRAWING NUMBER:

KnightJacobs Joint Venture
701 Scarboro Road, MS 8253
Oak Ridge, TN 37830
865-241-9433
fax 865-241-3400

m+w zander
M+W Zander U.S. Operations, Inc.
549 West Randolph Street
Chicago, IL 60661
Telephone: (312) 577-3200
Fax: (312) 577-3525

UT-BATTELLE
Oak Ridge National Laboratory
managed for the DEPARTMENT OF ENERGY under U.S. GOVERNMENT contract DE-AC05-00OR22725
UT-BATTELLE, LLC, © Oak Ridge, Tennessee

PROJECT NAME:
CENTER FOR NANOPHASE MATERIALS SCIENCES
CLEANROOM
INTERIOR CEILING DETAILS

1	48	49	50	PLANT	BLDG	FL	SH.	OF	TYPE	CLASS
3	A	X	X	8	8610		1	1		U
51		52		53	A/E DRAWING NUMBER:					REV
NC		NA			A9.42.40					0

AutoCAD