8	7	6	5	4	3	2	NEXT ASS'Y: 1 FINAL ASS'Y:

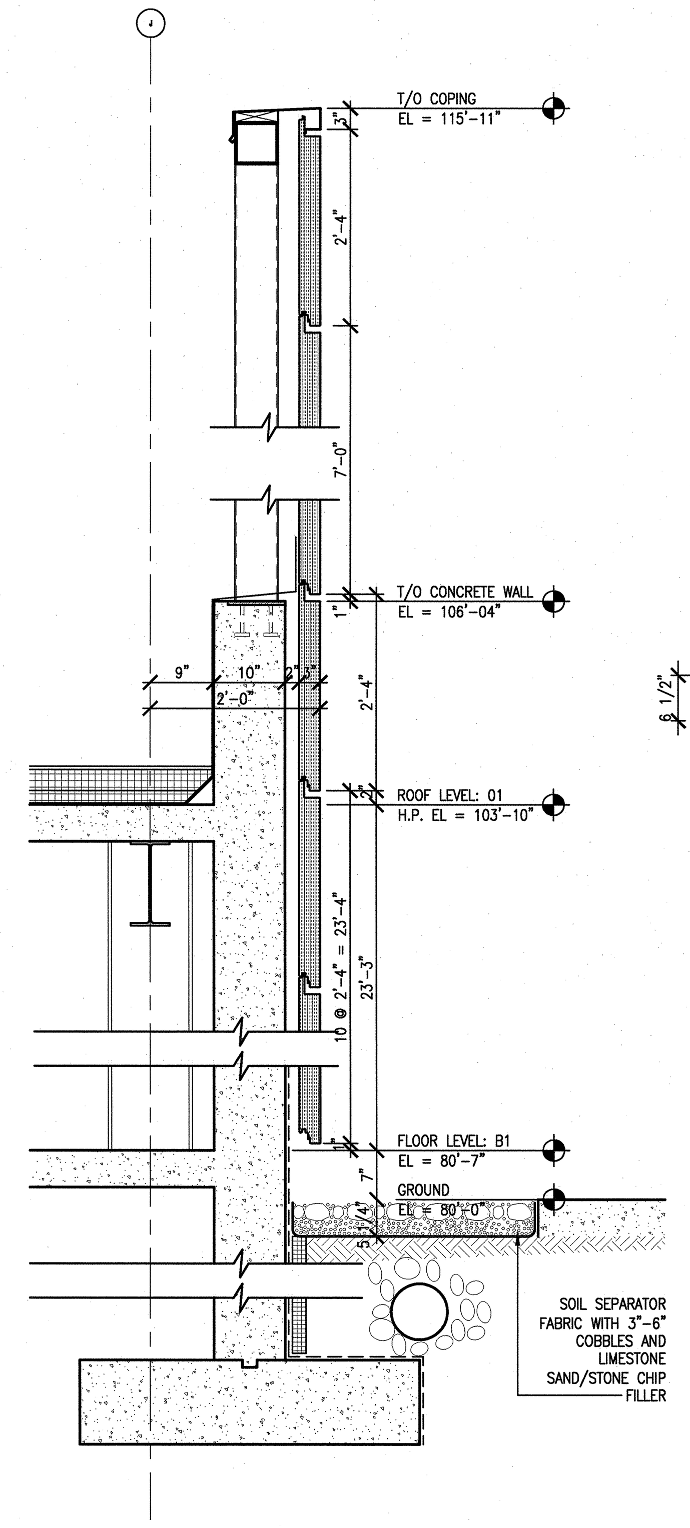

40 (A3.21.50) CONCRETE PARAPET @ CLEANROOM
SCALE: 3/4"=1'-0" ADT033001-8

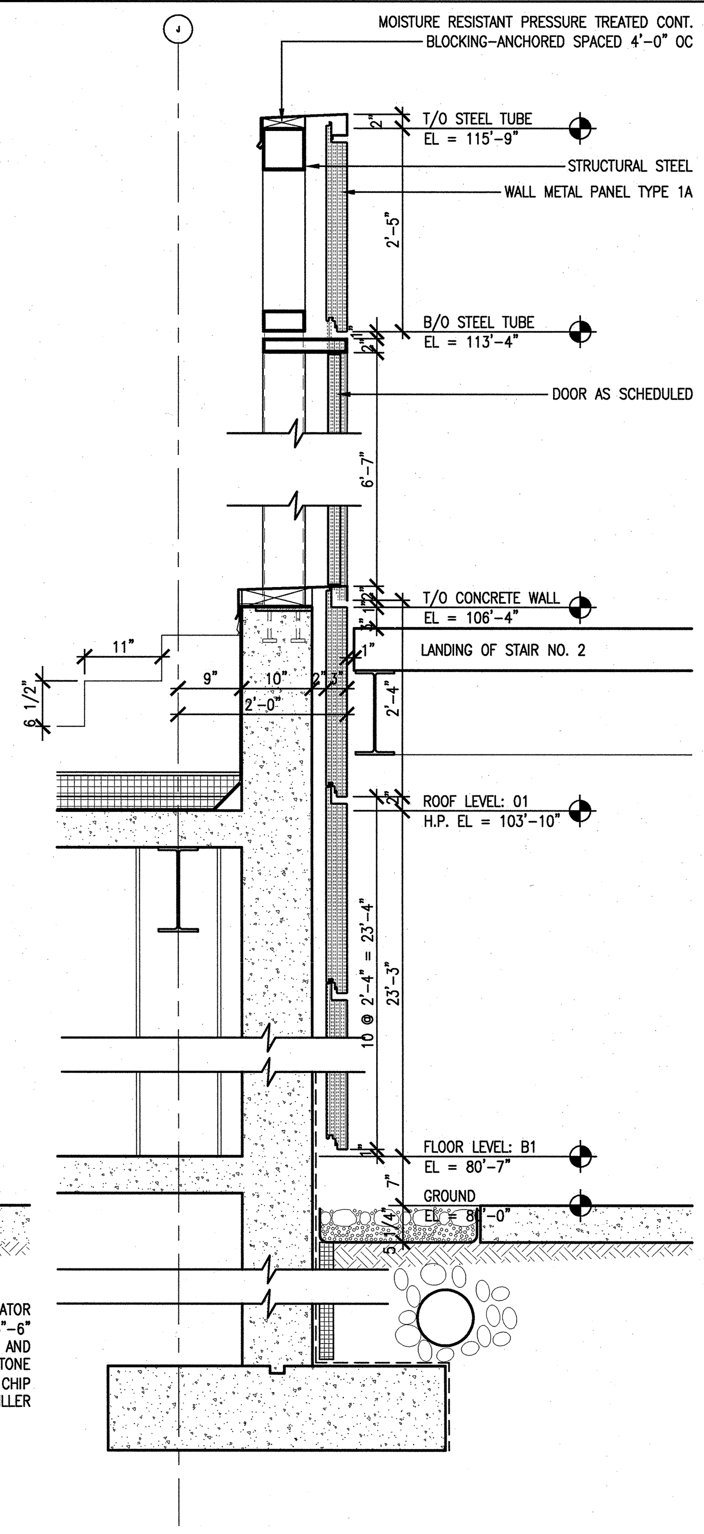

31 (A5.31.41) CONCRETE PARAPET @ CLEANROOM
SCALE: 3/4"=1'-0" ADT033001-8

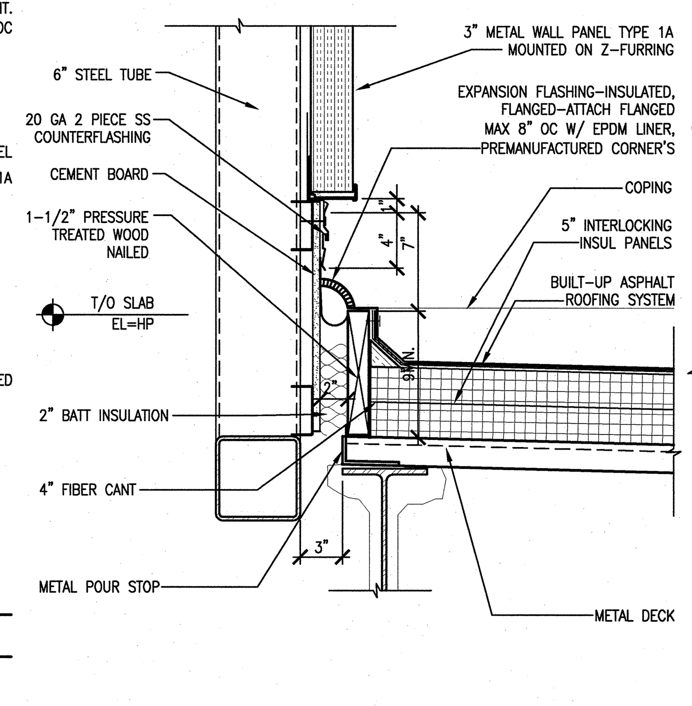

25 (A3.31.40) ROOF EXPANSION JOINT @ BRIDGE
SCALE: 1-1/2"=1'-0" ADT034032-8

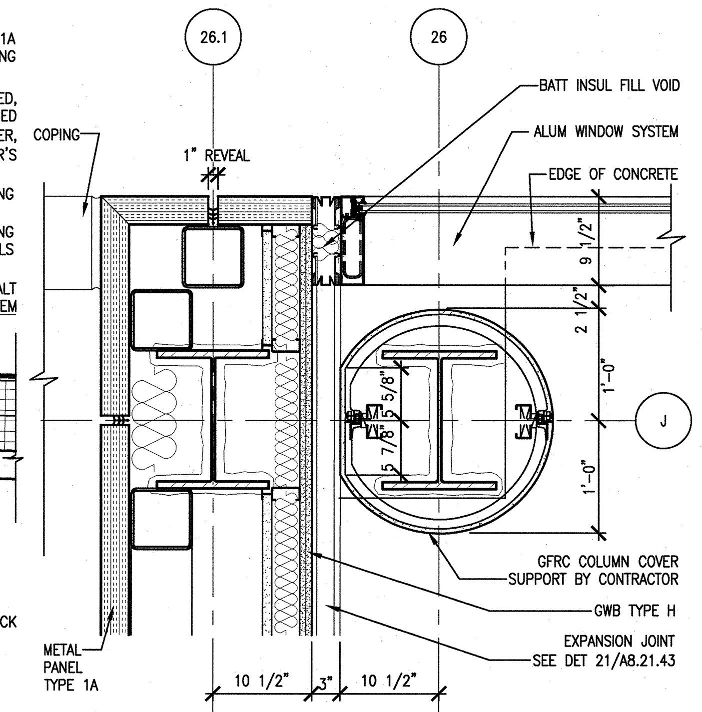

24 (A2.01.66) PLAN DETAIL - EXPANSION JOINT
SCALE: 1"=1'-0" ADT034031-8

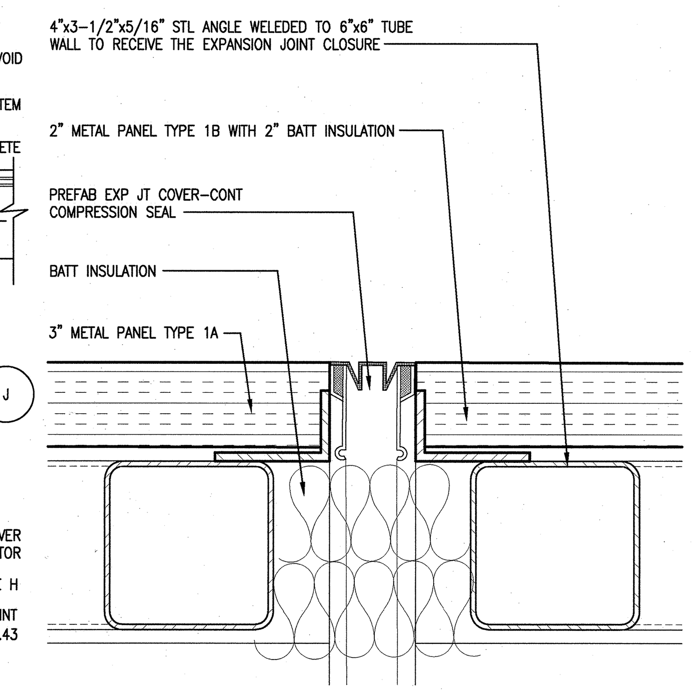

17 (A3.31.40) DETAIL - EXPANSION JOINT @ METAL PANEL
SCALE: 3"=1'-0" ADT034021-8

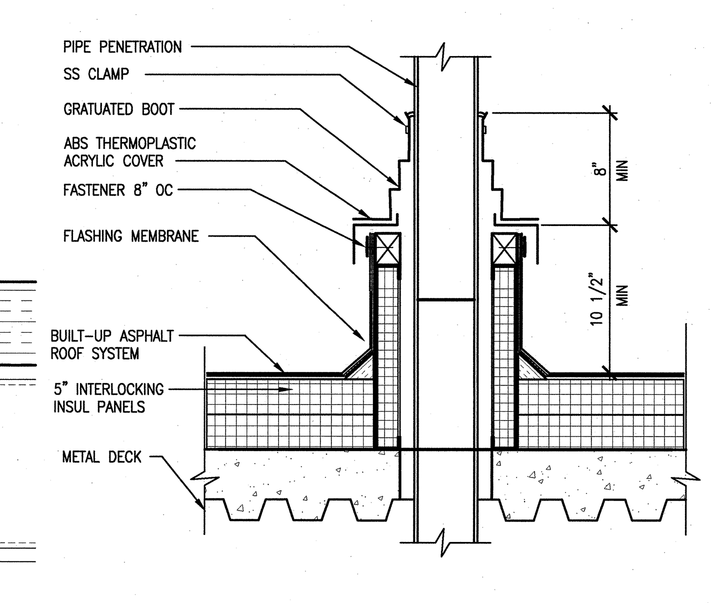

7 (A2.01.67) DETAIL - PIPE CURB
SCALE: 1 1/2"=1'-0" ADT077008-8

NOTE:
OVERFLOW DRAINS ARE TO BE INSTALLED IN THE SAME MANNER AS THE ROOF DRAINS, I.E., THE ROOF DRAINS ARE TO BE INSTALLED AT THE LOW POINTS AND OVERFLOW DRAINS ARE TO BE INSTALLED AT THE HIGH POINTS OF THE ROOF

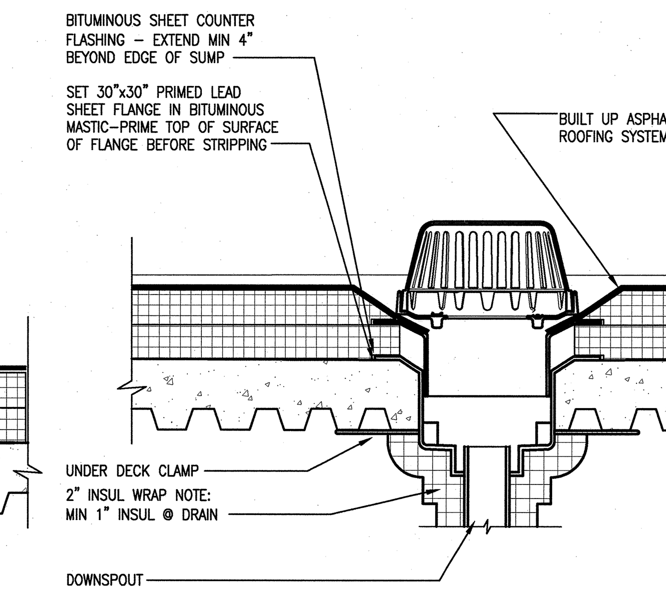

2 (A2.01.67) DETAIL-ROOF DRAIN & OVERFLOW DRAIN
SCALE: 1 1/2"=1'-0" ADT077007-8

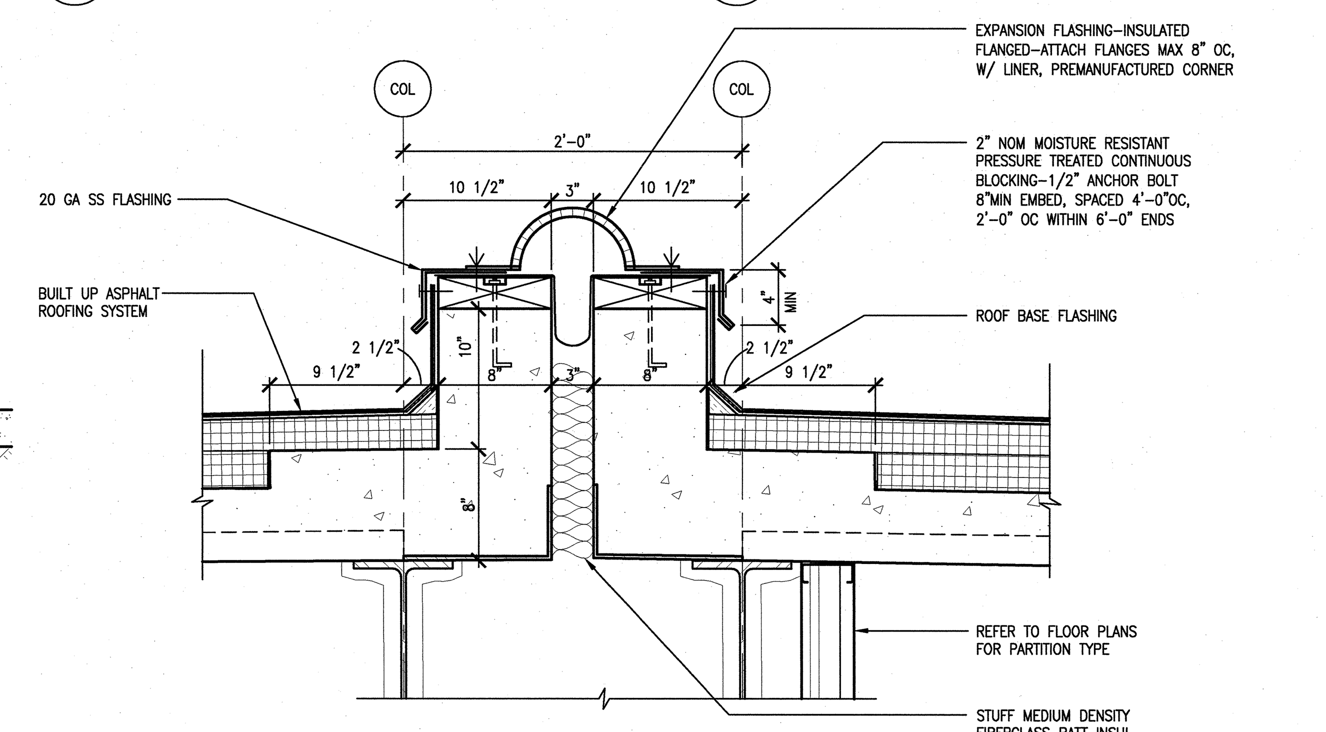

27 (A3.31.40) DETAIL - EXPANSION JOINT COVER @ CURBS
SCALE: 1 1/2"=1'-0" ADT077011-8

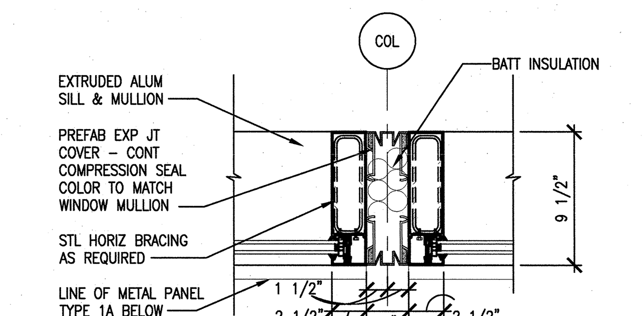

18 (A3.31.40) DETAIL - EXPANSION JOINT @ WINDOW
SCALE: 1-1/2"=1'-0" ADT034023-8

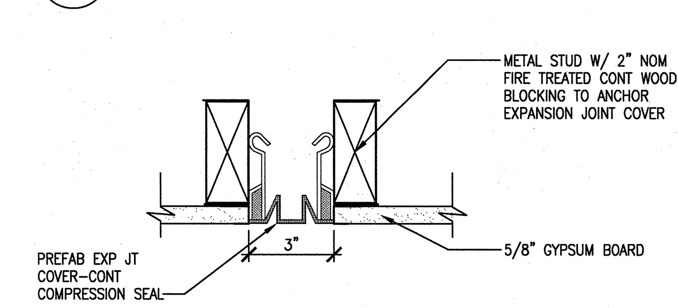

19 (A6.B1.66) DETAIL - EXPANSION JOINT COVER
SCALE: 3"=1'-0" ADT034024-8

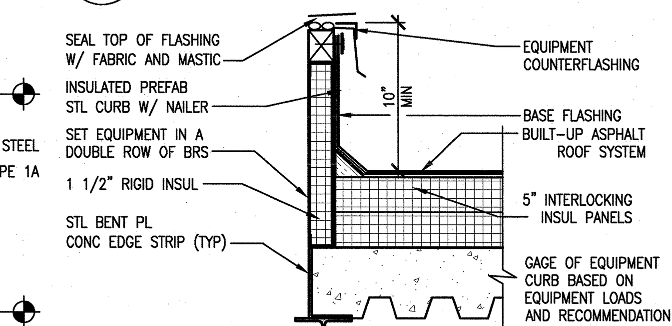

3 (A2.01.67) DETAIL-EQUIPMENT CURB
SCALE: 1 1/2"=1'-0" ADT077009-8

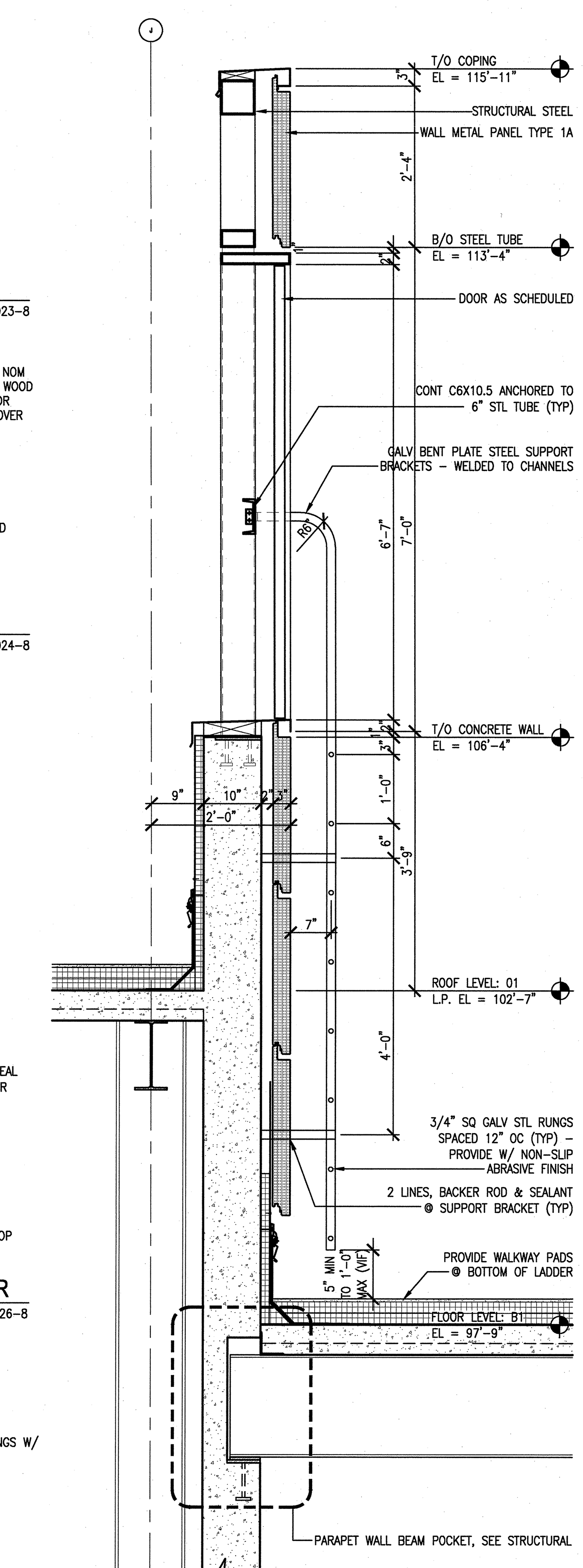

10 (A2.01.67) CONCRETE PARAPET @ CLEANROOM
SCALE: 3/4"=1'-0" ADT033001-8

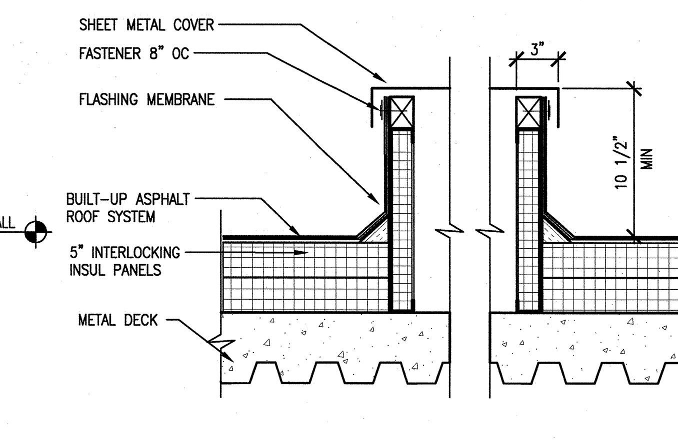

4 (A2.01.67) DETAIL - EQUIPMENT CURB
SCALE: 1 1/2"=1'-0" ADT077010-8

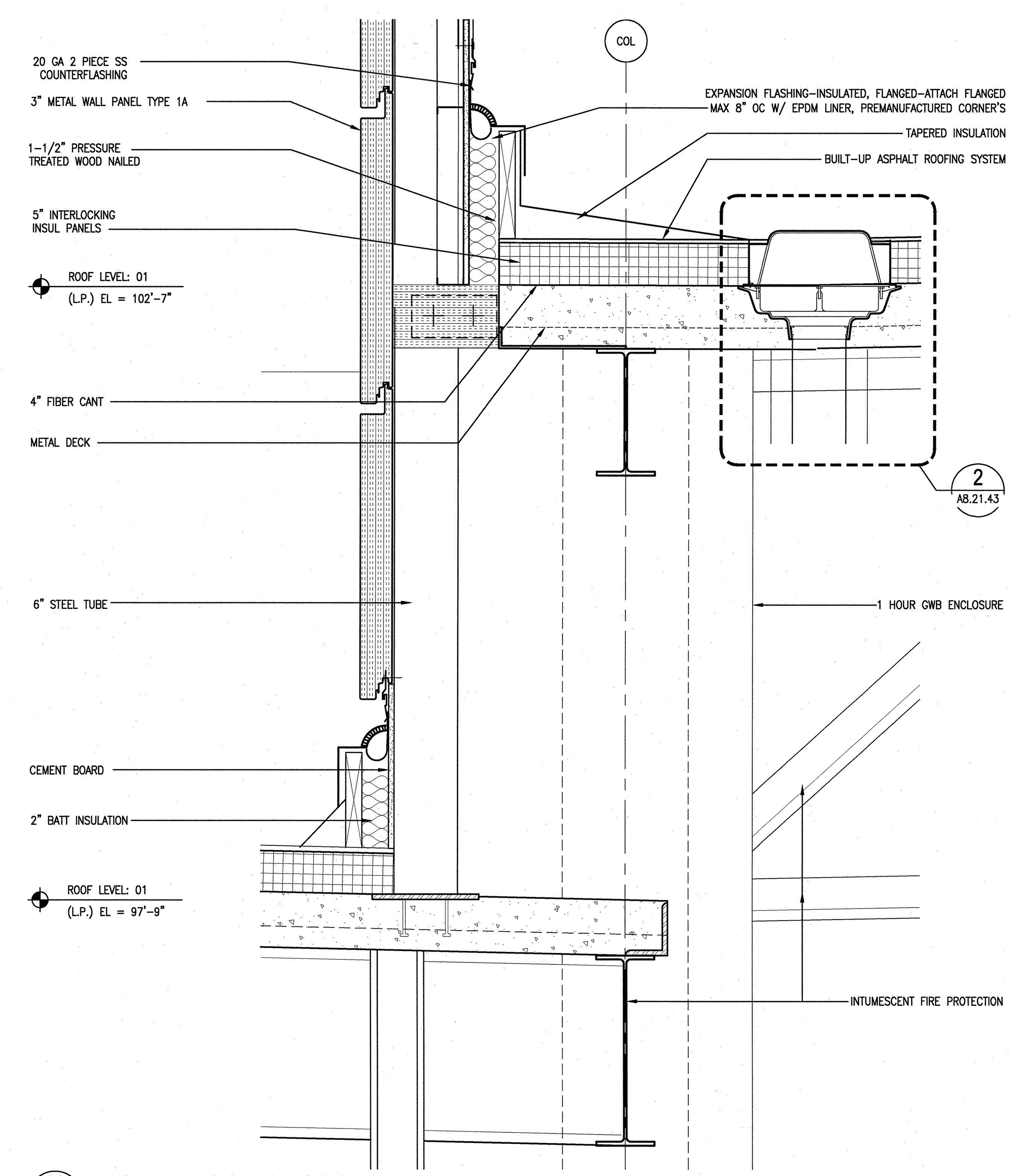

29 (A3.21.50) ROOF EXPANSION JOINT @ CLEANROOM
SCALE: 1-1/2"=1'-0" ADT034033-8

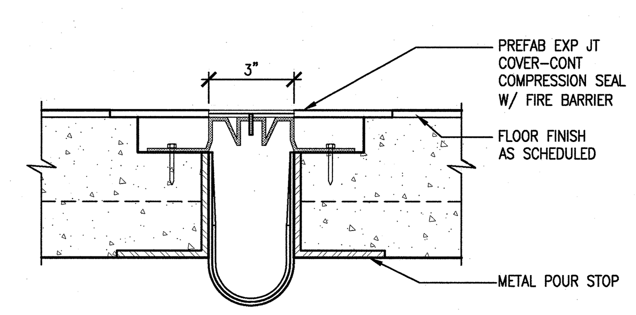

21 (A3.31.40) DETAIL - EXPANSION JOINT COVER @ FLOOR
SCALE: 3"=1'-0" ADT03426-8

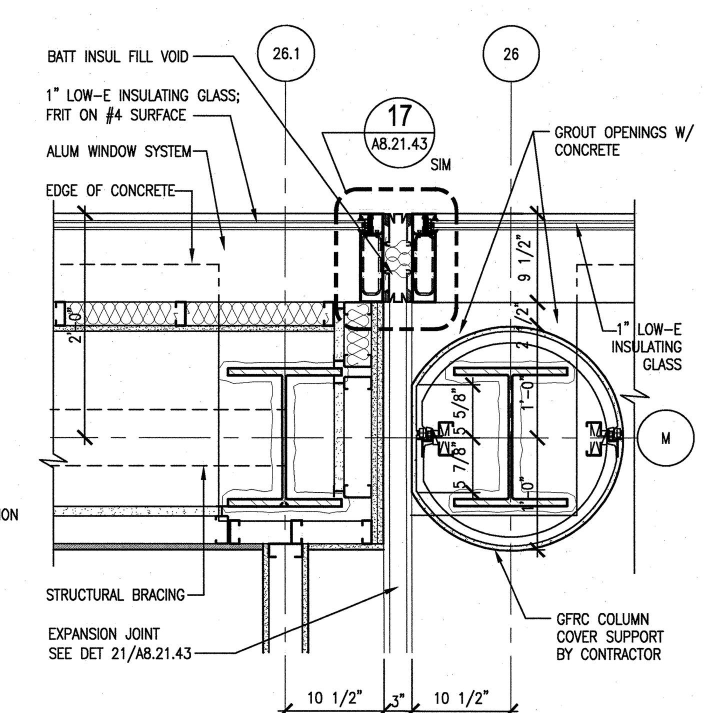

23 (A2.01.66) PLAN DETAIL - EXPANSION JOINT
SCALE: 1"=1'-0" ADT034030-8

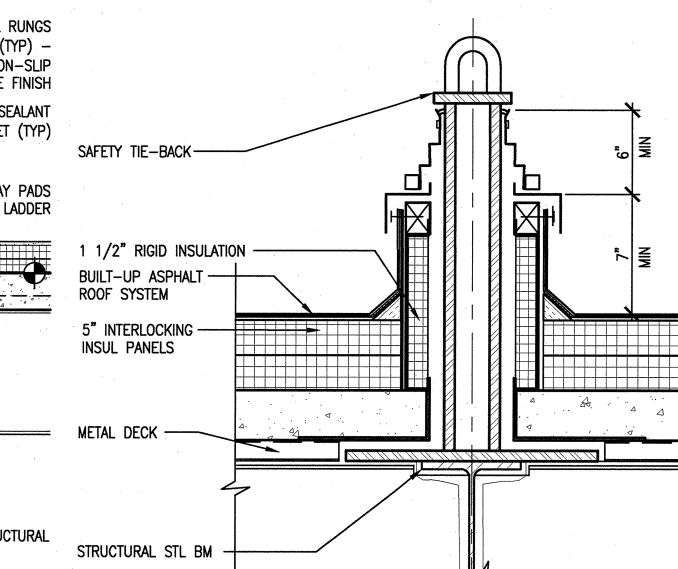

5 (A2.01.67) DETAIL - SAFETY TIE-BACK
SCALE: 1 1/2"=1'-0" ADT077006-8

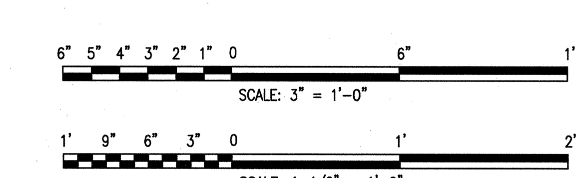

ORNL DRAWING NUMBER:

Knight/Jacobs Joint Venture
701 Scarboro Road, MS 8253
Oak Ridge, TN 37830
865-241-9433
fax 865-241-3400

m+w zander
M+W Zander U.S. Operations, Inc.
549 West Randolph Street
Chicago, IL 60661
Telephone: (312) 577-3200
Fax: (312) 577-3525

UT-BATTELLE
Oak Ridge National Laboratory
managed for the DEPARTMENT OF ENERGY under
U.S. GOVERNMENT contract DE-AC05-000R22725
UT-BATTELLE, LLC, Oak Ridge, Tennessee

PROJECT NAME:
CENTER FOR NANOPHASE MATERIALS SCIENCES
ROOF DETAILS
EXPANSION JOINTS

1	48	49	50	PLANT	BLDG	FL	SH.	OF	TYPE	CLASS
3	A	X	X	8	8610		1	1	P	U
51 NC		52 NA		53	A/E DRAWING NUMBER: A8.21.43				REV 0	

RPE			
ROBERT L. BARNES REGISTERED ARCHITECT NO. 102104 STATE OF TENNESSEE 12/09/02.	DSN	C. FINFROCK	12/9/02
	DRW	I-W WANG	12/9/02
	CHK	E. DENSON	12/9/02
	DEPT		
	PE	CLG [signature]	1/24/03
	PJ	JS [signature]	1/23/03
	REQ	[signature]	1/24/03
REV. DATE	UTB	JRL	
DRAWING APPROVALS			

REV	CHANGE TYPE	CHANGE CONTROL SYSTEM	CHANGE REQUEST NUMBER	DESCRIPTION	DSN	CHK	DEPT	DATE	PE	DATE	PJ	DATE	REQ	DATE	UTB	DATE	RPE	RPE NO	DATE
0				CERTIFIED FOR CONSTRUCTION-12/9/02	CF	ED			[signature]	1/03	[signature]	1/03	[signature]	1/03			RLB	102104	12/9/02
REVISION OR ISSUE PURPOSE								REVISION APPROVALS											

ST	CV	EC	EE	EM	IE	M	PD	SE	AR
RZ	AW	BWJ	AK	IM	DM	--	BWJ	--	TW
SQUAD CHECK									

NO REPRESENTATION OR WARRANTY, EXPRESSED OR IMPLIED, IS MADE AS TO THE ACCURACY, COMPLETENESS OR USEFULNESS OF THE INFORMATION OR STATEMENTS CONTAINED IN THESE DRAWINGS, OR THAT THE USE OR DISCLOSURE OF ANY INFORMATION, APPARATUS, METHOD, OR PROCESS DISCLOSED IN THESE DRAWINGS MAY NOT INFRINGE PRIVATE RIGHTS OF OTHERS. NO LIABILITY IS ASSUMED WITH RESPECT TO THE USE OF, OR FOR DAMAGES RESULTING FROM THE USE OF ANY INFORMATION, APPARATUS, METHOD, OR PROCESS DISCLOSED IN THESE DRAWINGS. DRAWINGS MADE AVAILABLE FOR INFORMATION TO BIDDER ARE NOT TO BE USED FOR OTHER PURPOSES AND ARE TO BE RETURNED UPON REQUEST OF THE FORWARDING CONTRACTOR.

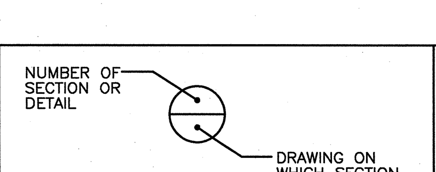

SECTION AND DETAIL KEY

THIS DOCUMENT CONTROLLED BY
CHANGE CONTROL SYSTEM ______
ENGINEERING PROCEDURE ______

AutoCAD P:\ORNL\LS0230.01-CNMS-Titled-II\0700-cadd\0712-architectural\A8-21-43.dwg @ 1/21/03 -- 1:59pm
Date: 12/17/2001 Time: 14:21:24
Username: WANGW
CHI-F VOL2:PROJECTS\7000\700 CADD\TASK 28\740 PLOT\A8-20-40.DWG

8	7	6	5	4	3	2	1