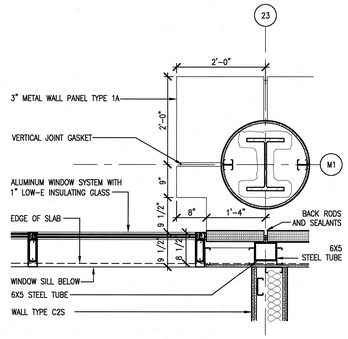


36 A3.31.47 PLAN DETAIL @ METAL PANEL 1A & WINDOW
SCALE: 3/4"=1'-0" ADT074087-8

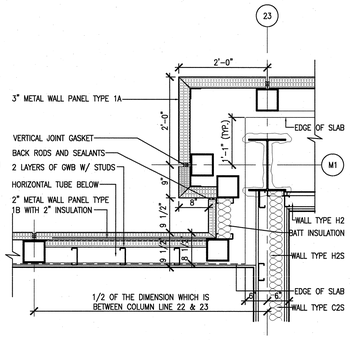


NOTE: THE CONNECTION AT COLUMN LINE 22 AND M1 IS THIS DETAIL'S IMAGE MIRROR. INTERIOR WALL TYPES PER FLOOR PLANS

31 A3.31.47 CORNER @ METAL PANEL 1A & 1B
SCALE: 3/4"=1'-0" ADT074086-8

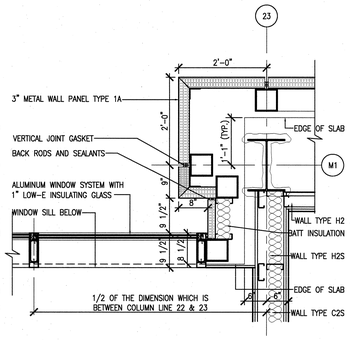


NOTE: THE CONNECTION AT COLUMN LINE 22 AND M1 IS THIS DETAIL'S IMAGE MIRROR. INTERIOR WALL TYPES PER FLOOR PLANS

30 A3.31.47 CORNER @ METAL PANEL 1A & WINDOW
SCALE: 3/4"=1'-0" ADT074085-8

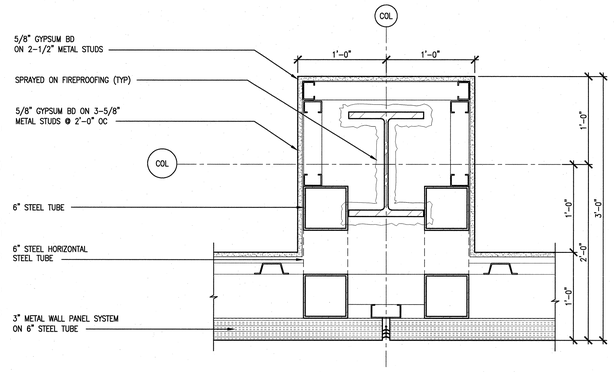


27 A2.B1.66 COLUMN ENCLOSURE AT METAL PANEL
SCALE: 1 1/2"=1'-0" ADT092012-8

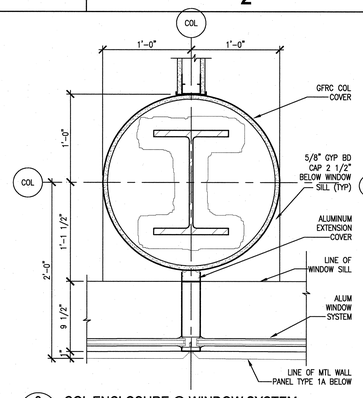


9 A3.31.42 COL ENCLOSURE @ WINDOW SYSTEM
SCALE: 1-1/2"=1'-0" ADT092020-8

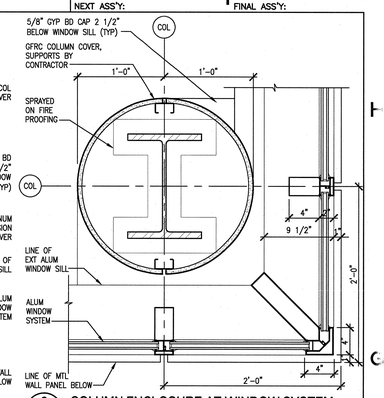


2 A3.31.42 COLUMN ENCLOSURE AT WINDOW SYSTEM
SCALE: 1 1/2"=1'-0" ADT092005-8

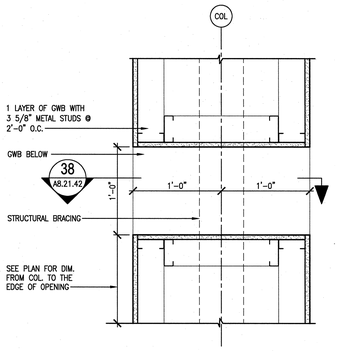


37 A5.11.43 PLAN WALL OPENING @ LABS
SCALE: 1 1/2" = 1' - 0" ADT092025-8

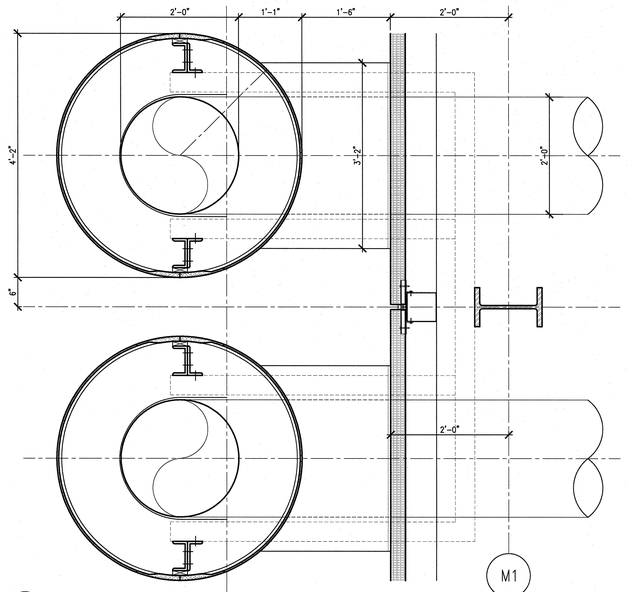


34 A3.31.48 EXHAUST PLAN DETAIL
1"=1'-0"

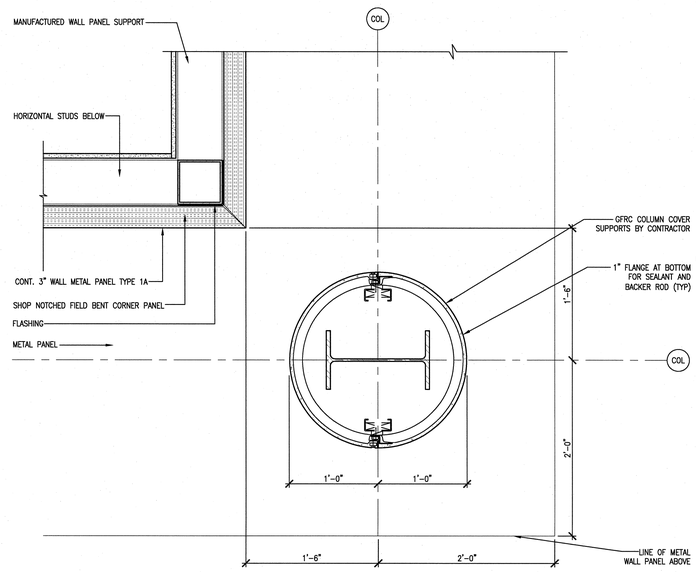


28 A2.B1.66 PLAN DETAIL AT WINDOW CORNER AND COLUMN COVER
SCALE: 1 1/2"=1'-0" ADT074089-8

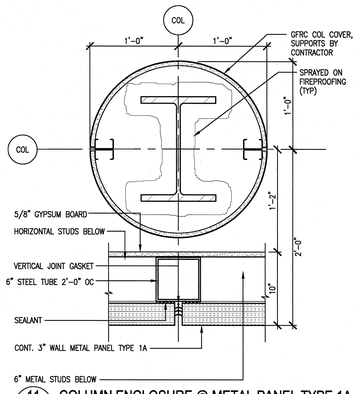


11 A3.21.42 COLUMN ENCLOSURE @ METAL PANEL TYPE 1A
1 1/2"=1'-0" ADT092011-8

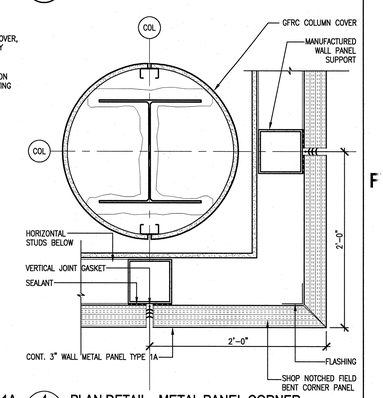


4 A3.21.42 PLAN DETAIL - METAL PANEL CORNER
SCALE: 1 1/2"=1'-0" ADT074083-8

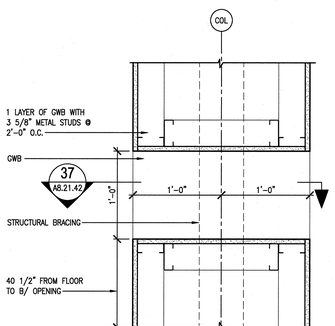


38 A5.11.43 SECTION WALL OPENING @ LABS
SCALE: 1 1/2" = 1' - 0" ADT092026-8

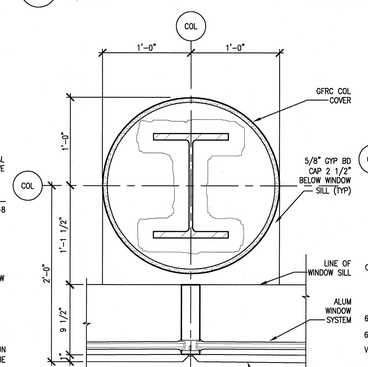


13 A2.B1.66 COL ENCLOSURE @ WINDOW SYSTEM
SCALE: 1-1/2"=1'-0" ADT092021-8

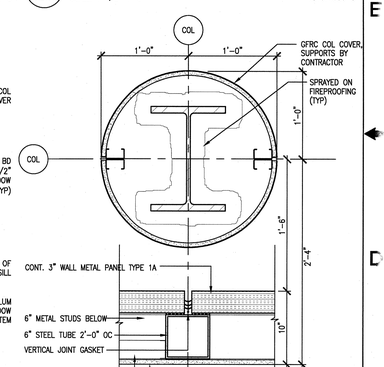


6 A2.B1.66 COLUMN ENCLOSURE @ RECESS
1 1/2"=1'-0" ADT092010-8

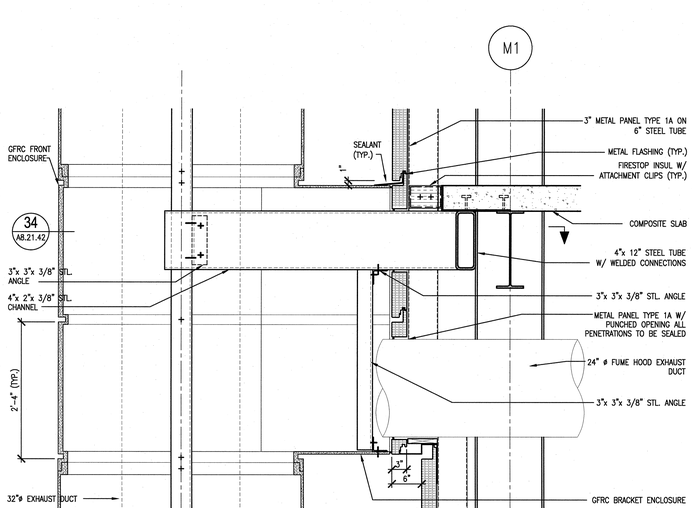


35 A3.31.52 EXHAUST SECTION DETAIL
1"=1'-0" ADT074101-8

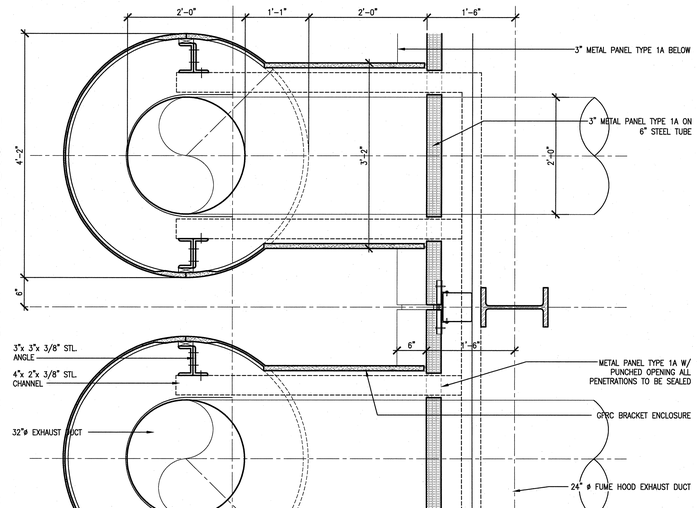


29 A3.31.52 EXHAUST PLAN DETAIL @ 6" RECESS BELTS
1"=1'-0" ADT074104-8

SCALE: 3" = 1'-0"

SCALE: 1-1/2" = 1'-0"

ORNL DRAWING NUMBER:


Knight/Jacobs Joint Venture
701 Scarboro Road, MS 8253
Oak Ridge, TN 37830
865-241-9433
fax 865-241-3400

m+w zander
M+W Zander U.S. Operations, Inc.
549 West Randolph Street
Chicago, IL 60661
Telephone: (312) 577-3200
Fax: (312) 577-3525

UT-BATTELLE
Oak Ridge National Laboratory
managed for the DEPARTMENT OF ENERGY under U.S. GOVERNMENT contract DE-AC05-00OR22725
UT-BATTELLE, LLC. + Oak Ridge, Tennessee


| REV | CHANGE TYPE | CHANGE CONTROL SYSTEM | CHANGE REQUEST NUMBER | DESCRIPTION | DSN | CHK | DEPT | DATE | PE | DATE | PJ | DATE | REQ | DATE | UTB | DATE | RPE | RPE NO | DATE |
|---|---|---|---|---|---|---|---|---|---|---|---|---|---|---|---|---|---|---|---|
| 0 | | | | CERTIFIED FOR CONSTRUCTION-12/9/02 | CF | ED | | | | | | | | | | | RLB | 102104 | 12/9/02 |

REVISION OR ISSUE PURPOSE — REVISION APPROVALS

| RZ | AW | BWJ | AK | IM | DM | --- | BWJ | -- | TW |
|---|---|---|---|---|---|---|---|---|---|
| ST | CV | EC | EE | EM | IE | M | PD | SE | AR |

SQUAD CHECK

RPE: ROBERT L. BARNES, REGISTERED ASSOCIATE ARCHITECT, NO. 102104, STATE OF TENNESSEE — 12/09/02

| | | |
|---|---|---|
| DSN | C. FINFROCK | 12/9/02 |
| DRW | I-W WANG | 12/9/02 |
| CHK | E. DENSON | 12/9/02 |
| DEPT | | |
| PE | CLG | 12/9/02 |
| PJ | JS | 12/9/02 |
| REQ | | 12/9/02 |
| UTB | JRL | |

REV. DATE — DRAWING APPROVALS

PROJECT NAME:
CENTER FOR NANOPHASE MATERIALS SCIENCES
EXTERIOR ENCLOSURE DETAILS
EXTERIOR & INTERIOR COLUMNS
EXHAUST ENCLOSURE

| 1 | 48 | 49 | 50 | PLANT | BLDG | FL | SH. | OF | TYPE | CLASS |
|---|---|---|---|---|---|---|---|---|---|---|
| 3 | A | X | X | 8 | 8610 | | 1 | 1 | P | U |
| 51 | | 52 | | 53 | A/E DRAWING NUMBER: | | | | | REV |
| NC | | NA | | | A8.21.42 | | | | | 0 |


NO REPRESENTATION OR WARRANTY, EXPRESSED OR IMPLIED, IS MADE AS TO THE ACCURACY, COMPLETENESS OR USEFULNESS OF THE INFORMATION OR STATEMENTS CONTAINED IN THESE DRAWINGS, OR THAT THE USE OR DISCLOSURE OF ANY INFORMATION, APPARATUS, METHOD, OR PROCESS DISCLOSED IN THESE DRAWINGS MAY NOT INFRINGE PRIVATE RIGHTS OF OTHERS. NO LIABILITY IS ASSUMED WITH RESPECT TO THE USE OF, OR FOR DAMAGES RESULTING FROM THE USE OF ANY INFORMATION, APPARATUS, METHOD, OR PROCESS DISCLOSED IN THESE DRAWINGS. DRAWINGS MADE AVAILABLE FOR INFORMATION TO BIDDER ARE NOT TO BE USED FOR OTHER PURPOSES AND ARE TO BE RETURNED UPON REQUEST OF THE FORWARDING CONTRACTOR.


NUMBER OF SECTION OR DETAIL
DRAWING ON WHICH SECTION OR DETAIL IS SHOWN OR TAKEN
SECTION AND DETAIL KEY

THIS DOCUMENT CONTROLLED BY
CHANGE CONTROL SYSTEM
ENGINEERING PROCEDURE

AutoCAD