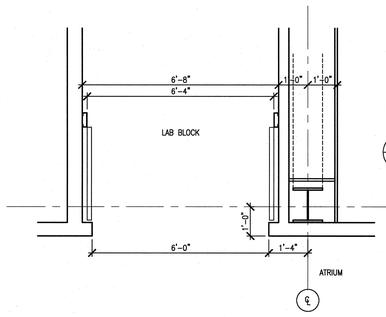

17 A7.41.40 PLAN DETAIL
SCALE: 1/2"=1'-0" ADT083005-8

8 A7.41.40 TYP. DOOR/WINDOW JAMB (HEAD/SIM)
SCALE: 3" = 1' - 0" ADT081004-8

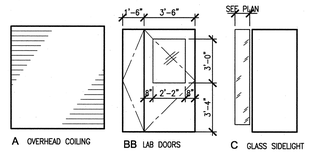

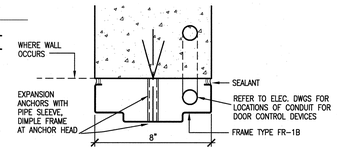

9 A7.41.40 TYP. DOOR JAMB (HEAD SIM.)
SCALE: 3" = 1' - 0" ADT081005-8

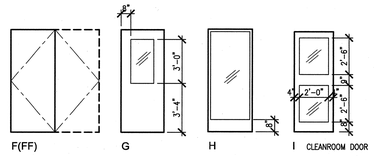

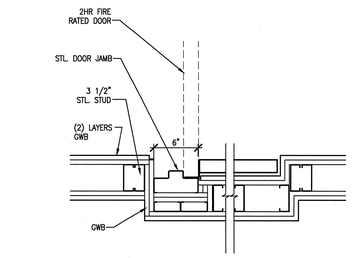

19 A7.41.40 PLAN DETAIL
SCALE: 1 1/2" = 1'- 0" ADT083003-8

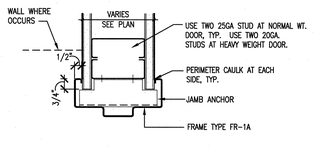

10 A7.41.40 TYP. DOOR JAMB (HEAD SIM.)
SCALE: 3"=1'-0" ADT081002-8

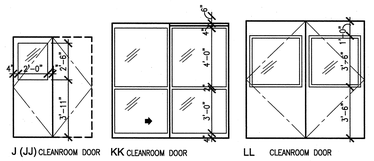

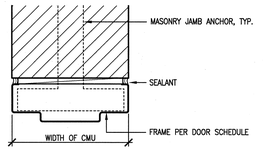

11 A7.41.40 TYP. DOOR JAMB (HEAD SIM.)
SCALE: 3" = 1' - 0" ADT081030-8

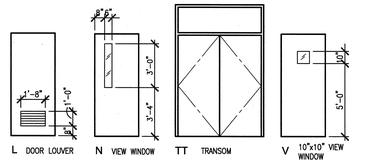

NOTE: DOUBLE LETTER DESIGNATIONS AS NOTED ON DOOR SCHEDULES REFER TO PAIR OF SINGLE LEAF DESIGNATIONS, UON.

1 A7.41.40 DOOR TYPES
SCALE: 1/4" = 1' - 0" ADT081001-8

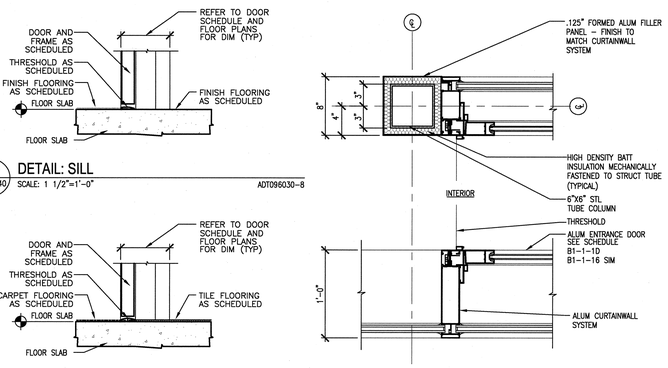

20 A7.41.40 DETAIL: SILL
SCALE: 1 1/2"=1'-0" ADT096030-8

21 A7.41.40 DETAIL: SILL
SCALE: 1 1/2"=1'-0" ADT096010-8

13 A7.41.40 PLAN DETAIL - ENTRANCE VESTIBULE CORNER
SCALE: 1-1/2"=1'-0" ADT083004-8

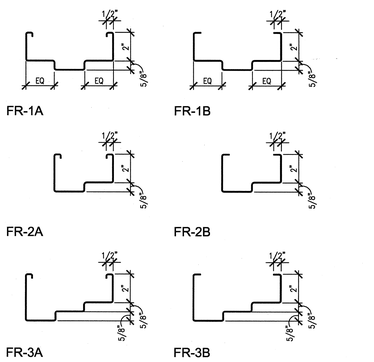

2 A7.41.40 HOLLOW METAL FRAMES
SCALE: 3"=1'-0" ADT055120-8

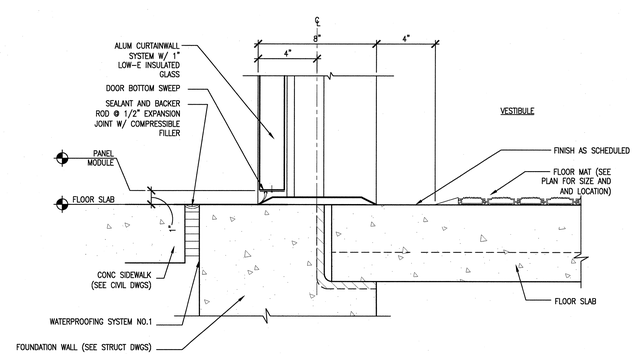

23 A7.41.40 DETAIL: ENTRY VESTIBULE DOOR SILL
SCALE: 3"=1'-0" ADT096020-8

ORNL DRAWING NUMBER:

KnightJacobs Joint Venture
701 Scarboro Road, MS 8253
Oak Ridge, TN 37830
865-241-9433
fax 865-241-3400

m+w zander
M+W Zander U.S. Operations, Inc.
549 West Randolph Street
Chicago, IL 60661
Telephone: (312) 577-3200
Fax: (312) 577-3525

Oak Ridge National Laboratory
managed for the DEPARTMENT OF ENERGY under U.S. GOVERNMENT contract DE-AC05-00OR22725
UT-BATTELLE, LLC. + Oak Ridge, Tennessee

PROJECT NAME:
CENTER FOR NANOPHASE MATERIALS SCIENCES DOOR DETAILS

1	48	49	50	PLANT	BLDG	FL	SH.	OF	TYPE	CLASS
3	A	X	X	8	8610		1	1	P	U
51		52		53	A/E DRAWING NUMBER:					REV
NC		NA			A7.41.40					0

DSN	C. FINROCK	12/9/02
DRW	I-W WANG	12/9/02
CHK	E. DENSON	12/9/02
DEPT		
PE	CLG	1/24/03
PJ	JS	1/24/03
REQ		1/24/03
UTB	JRL	

RPE: ROBERT L. BARNES, REGISTERED ARCHITECT, AGRICULTURE, NO. 102104, STATE OF TENNESSEE — 12/09/02

REV. DATE — DRAWING APPROVALS

REV	CHANGE TYPE	CHANGE CONTROL SYSTEM	CHANGE CONTROL NUMBER	DESCRIPTION	DSN	CHK	DEPT	DATE	PE	DATE	PJ	DATE	REQ	DATE	UTB	DATE	RPE	RPE NO	DATE
0	–	–	–	CERTIFIED FOR CONSTRUCTION-12/9/02	CF	ED			CLG 1/24/03		JS 1/24/03		1/24/03				RLB	102104	12/9/02

REVISION OR ISSUE PURPOSE — REVISION APPROVALS

ST	CV	EC	EE	EM	IE	M	PD	SE	AR
RZ	AW	BWJ	AK	IM	DM	--	BWJ	--	TW

SQUAD CHECK

THIS DOCUMENT CONTROLLED BY
CHANGE CONTROL SYSTEM
ENGINEERING PROCEDURE

NUMBER OF SECTION OR DETAIL
DRAWING ON WHICH SECTION OR DETAIL IS SHOWN OR TAKEN
SECTION AND DETAIL KEY

NO REPRESENTATION OR WARRANTY, EXPRESSED OR IMPLIED, IS MADE AS TO THE ACCURACY, COMPLETENESS OR USEFULNESS OF THE INFORMATION OR STATEMENTS CONTAINED IN THESE DRAWINGS, OR THAT THE USE OR DISCLOSURE OF ANY INFORMATION, APPARATUS, METHOD, OR PROCESS DISCLOSED IN THESE DRAWINGS MAY NOT INFRINGE PRIVATE RIGHTS OF OTHERS. NO LIABILITY IS ASSUMED WITH RESPECT TO THE USE OF, OR FOR DAMAGES RESULTING FROM THE USE OF ANY INFORMATION, APPARATUS, METHOD, OR PROCESS DISCLOSED IN THESE DRAWINGS. DRAWINGS MADE AVAILABLE FOR INFORMATION TO BIDDER ARE NOT TO BE USED FOR OTHER PURPOSES AND ARE TO BE RETURNED UPON REQUEST OF THE FORWARDING CONTRACTOR.

AutoCAD