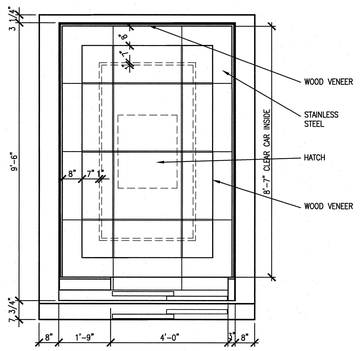

5 A5.31.42 ELEVATOR CAB P-1- REFLECTED CEILING
SCALE: 1/2"=1'-0" AIE005-8

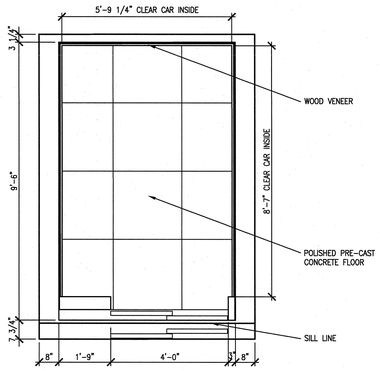

5 A5.31.42 ELEVATOR CAB P-1 - PLAN
SCALE: 1/2"=1'-0" AIE005-8

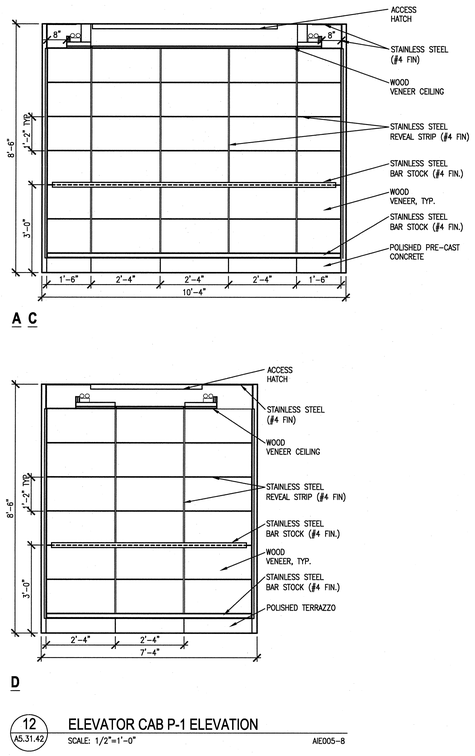

12 A5.31.42 ELEVATOR CAB P-1 ELEVATION
SCALE: 1/2"=1'-0" AIE005-8

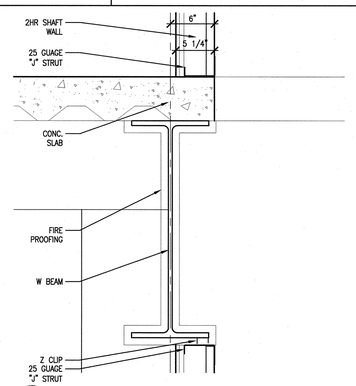

9 A5.31.42 DETAIL- ELEVATOR SHAFT WALL SECTION
SCALE: 1-1/2"=1'-0" ADT142006-8

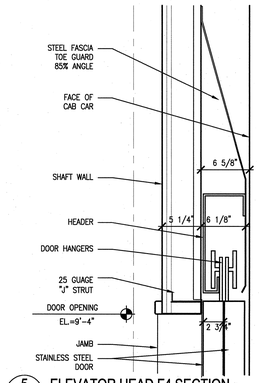

5 A5.31.42 ELEVATOR HEAD F4 SECTION
SCALE: 1-1/2"=1'-0" ADT142002-8

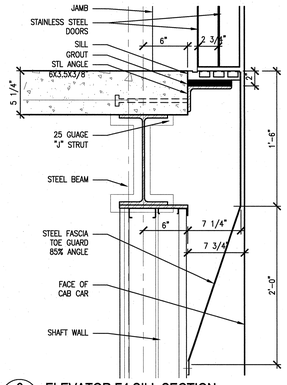

6 A5.31.42 ELEVATOR F4 SILL SECTION
SCALE: 1-1/2"=1'-0" ADT142002-8

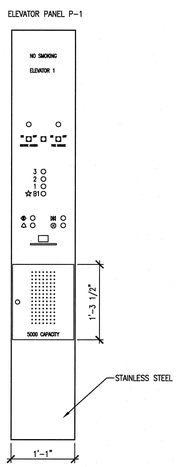

10 A5.31.42 ELEVATOR PANELS
SCALE: 1" = 1'- 0" ADT142007-8

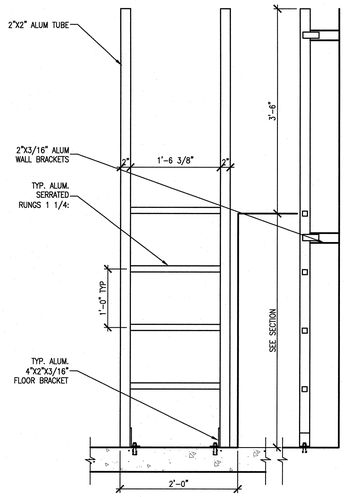

7 A5.31.42 DETAIL- LADDER
SCALE: 1" = 1'- 0" A07055030-8

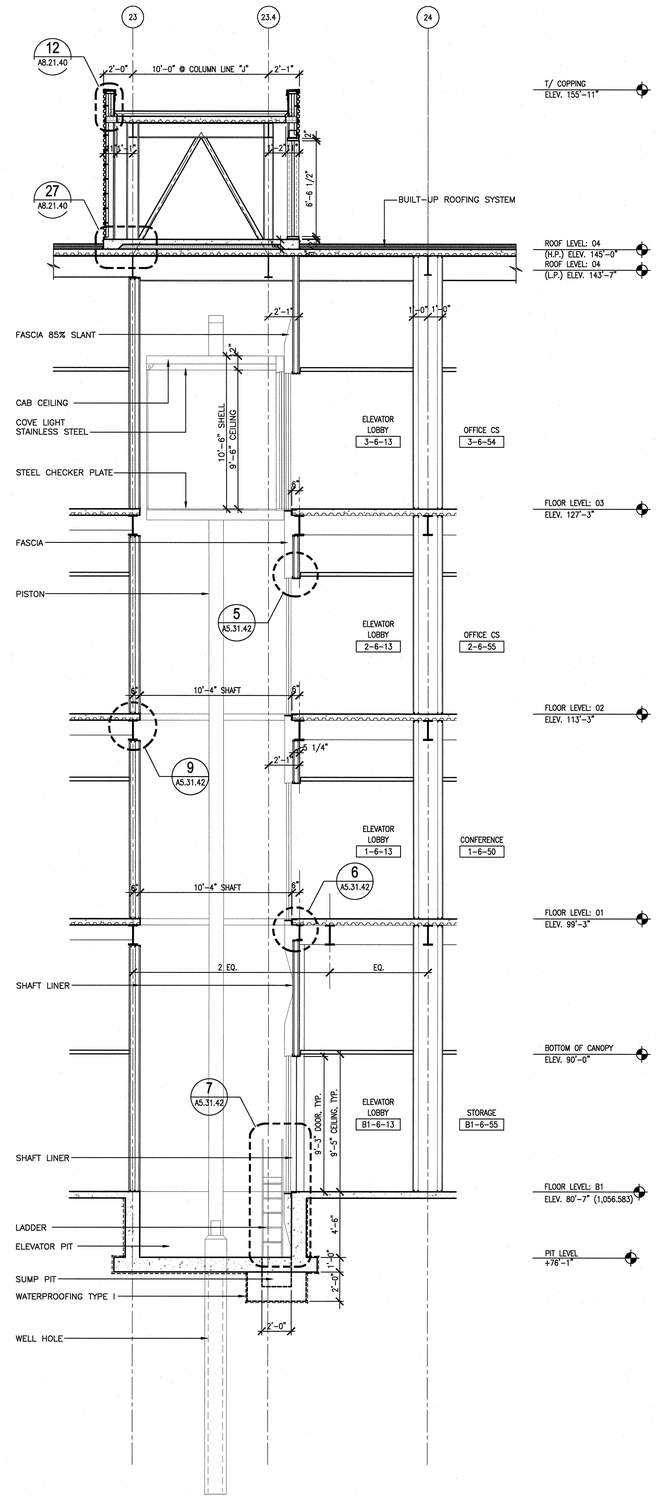

NOTE: DIMENSIONS GIVEN ARE FROM CENTER OF COLUMN TO CENTER OF COLUMN AT 12" SOUTH OF COLUMN LINE "M1"

4 A5.31.42 ELEVATOR P-1 SECTION
SCALE: 1/4"=1'-0" AWS201-8

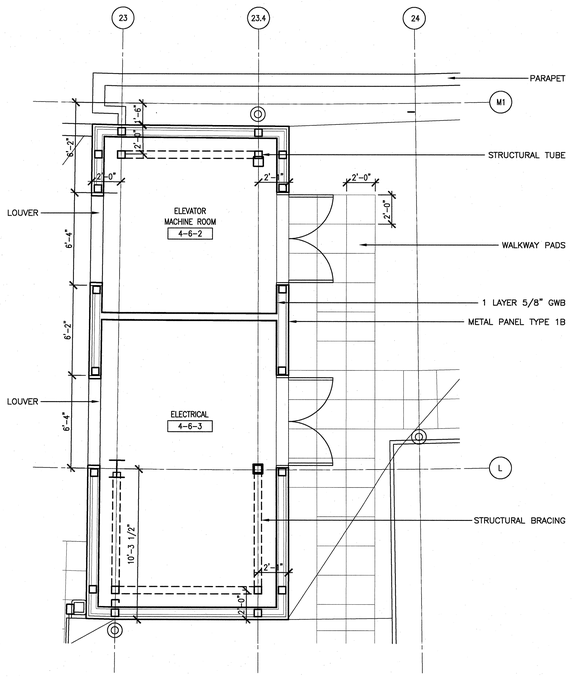

1 A5.31.42 ELEVATOR P-1 PLAN - LEVEL 04
SCALE: 1/4"=1'-0" AFP040-8

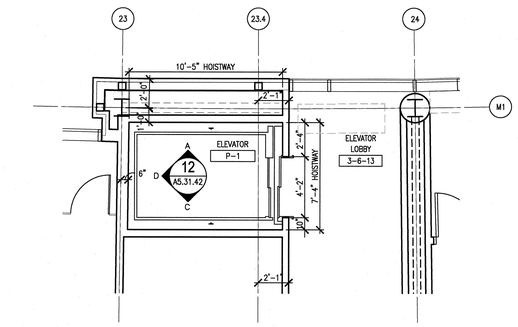

2 A5.31.42 ELEVATOR P-1 PLAN - LEVEL B1 THROUGH LEVEL 03
SCALE: 1/4"=1'-0" AFP030-8

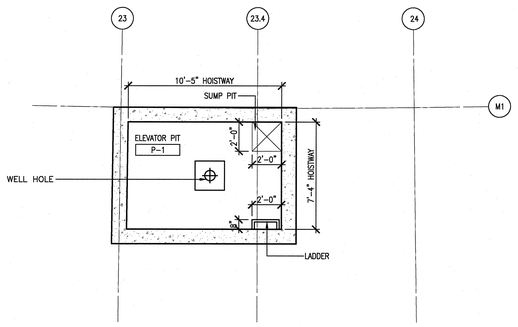

3 A5.31.42 ELEVATOR P-1 PLAN - PIT
SCALE: 1/4"=1'-0" AFPB15-8

NO REPRESENTATION OR WARRANTY, EXPRESSED OR IMPLIED, IS MADE AS TO THE ACCURACY, COMPLETENESS OR USEFULNESS OF THE INFORMATION OR STATEMENTS CONTAINED IN THESE DRAWINGS, OR THAT THE USE OR DISCLOSURE OF ANY INFORMATION, APPARATUS, METHOD, OR PROCESS DISCLOSED IN THESE DRAWINGS MAY NOT INFRINGE PRIVATE RIGHTS OF OTHERS. NO LIABILITY IS ASSUMED WITH RESPECT TO THE USE OF, OR FOR DAMAGES RESULTING FROM THE USE OF ANY INFORMATION, APPARATUS, METHOD, OR PROCESS DISCLOSED IN THESE DRAWINGS. DRAWINGS MADE AVAILABLE FOR INFORMATION TO BIDDER ARE NOT TO BE USED FOR OTHER PURPOSES AND ARE TO BE RETURNED UPON REQUEST OF THE FORWARDING CONTRACTOR.

NUMBER OF SECTION OR DETAIL
DRAWING ON WHICH SECTION OR DETAIL IS SHOWN OR TAKEN
SECTION AND DETAIL KEY

THIS DOCUMENT CONTROLLED BY
CHANGE CONTROL SYSTEM
ENGINEERING PROCEDURE

REV	CHANGE TYPE	CHANGE CONTROL SYSTEM	CHANGE REQUEST NUMBER	DESCRIPTION	DSN	CHK	DEPT	DATE	PE	DATE	PJ	DATE	REQ	DATE	UTB	DATE	RPE	RPE NO	DATE	RZ	AW	BWJ	AK	IM	DM	--	BWJ	--	TW
0				CERTIFIED FOR CONSTRUCTION-12/9/02	CF	ED											RLB	102104	12/9/02										
																				ST	CV	EC	EE	EM	IE	M	PD	SE	AR

REVISION OR ISSUE PURPOSE — REVISION APPROVALS — SQUAD CHECK

RPE: ROBERT L. BARNES, REGISTERED ARCHITECT, STATE OF TENNESSEE, REG. 102104 — 12/09/02

REV.	DATE	DRAWING APPROVALS			
		DSN	C. FINFROCK	12/9/02	
		DRW	I-W WANG	12/9/02	
		CHK	E. DENSON	12/9/02	
		DEPT			
		PE	CLG	12/9/02	
		PJ	JS	12/9/02	
		REQ		12/9/02	
		UTB	JRL		

ORNL DRAWING NUMBER:

KnightJacobs Joint Venture
701 Scarboro Road, MS 8253
Oak Ridge, TN 37830
865-241-9433
fax 865-241-3400

M+W Zander U.S. Operations, Inc.
549 West Randolph Street
Chicago, IL 60661
Telephone: (312) 577-3200
Fax: (312) 577-3525

UT-BATTELLE
Oak Ridge National Laboratory
managed for the DEPARTMENT OF ENERGY under U.S. GOVERNMENT contract DE-AC05-00OR22725
UT-BATTELLE, LLC. + Oak Ridge, Tennessee

PROJECT NAME:
CENTER FOR NANOPHASE MATERIALS SCIENCES
ELEVATOR P-1
ENLARGED PLANS & SECTIONS
ELEVATIONS & DETAILS

1	48	49	50	PLANT	BLDG	FL	SH.	OF	TYPE	CLASS
3	A	X	X	8	8610		1	1	P	U
51		52		53	A/E DRAWING NUMBER:					REV
NC		NA			A5.31.42					0