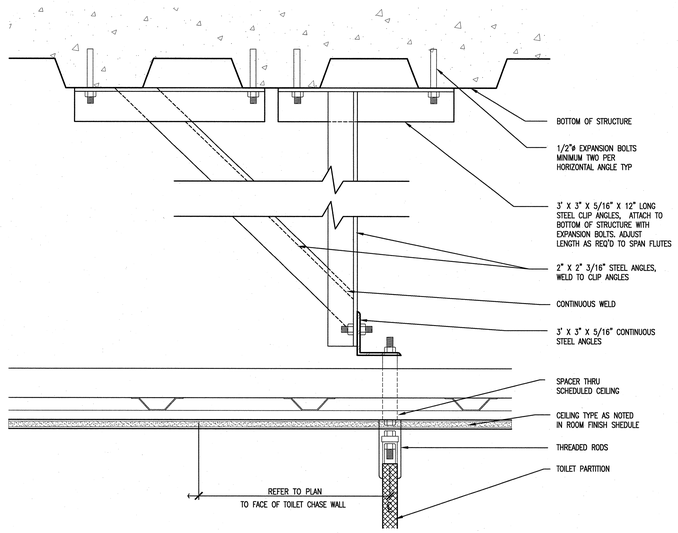

NOTE: MAX SPACING OF METAL SUPPORTS – 3'-0" OC AND AT EACH PILASTILE

11 A5.21.40 TYPICAL TOILET PARTITION SUPPORT

SCALE: 3"=1'-0" ADT108007-8

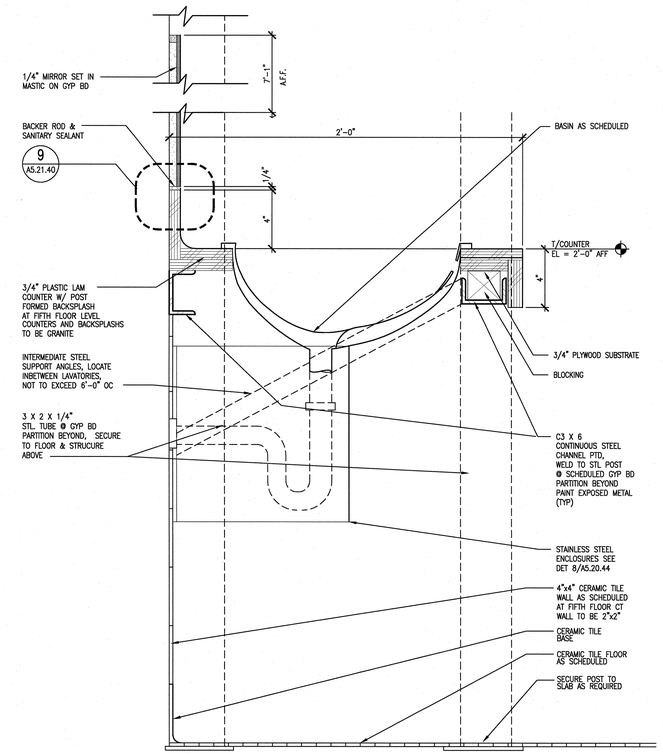

6 A5.21.40 TYPICAL LAVATORY SECTION

SCALE: 3"=1'-0" ADT108005-8

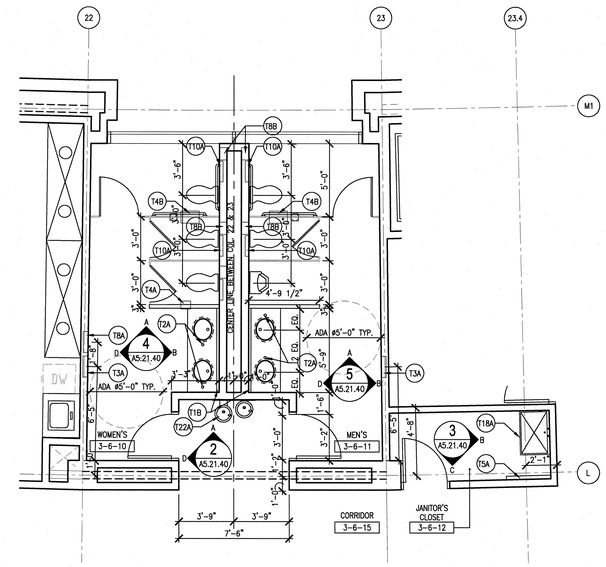

1 A5.21.40 TYPICAL TOILET ROOM PLAN AT COL. 22

1/4"=1'-0" AIE109-8

ACCESSORIES SCHEDULE

MARK	DESCRIPTION	MANUFACTURER'S REFERENCE NUMBER	REMARKS
T1B	WALL MIRROR W/STAINLESS STEEL FRAME	–	–
T2A	LAVATORY – MOUNTED SOAP DISPENSER	ASI-0332	–
T3A	RECESSED COMBINATION PAPER TOWEL DISPENSER AND WASTE RECEPTACLE	ASI-6462-2	–
T4A	RECESSED MOUNTED TWIN HIDE-A-ROLL TOILET TISSUE DISPENSER	ASI-0031	–
T4B	PARTITION MOUNTED DUAL HIDE-A-ROLL TOILET TISSUE DISPENSER	ASI-0032	–
T6A	36" GRAB BAR, 1 1/2" DIA	ASI-3100-P x 36	–
T6B	42" GRAB BAR, 1 1/2" DIA	ASI-3100-P x 42	–
T8A	RECESSED SANITARY NAPKIN AND TAMPON DISPENSER	ASI-6488	–
T8B	RECESSED SANITARY NAPKIN DISPOSAL UNIT	ASI-6471	–
T10A	RECESSED TOILET SEAT COVER DISPENSER	ASI-6477	–
T22A	DRINKING FOUNTAINS	–	SEE NOTE 4
T18A	3' X 2' PRECAST TERRAZZO MOP BASIN WITH INTEGRAL SS TILING FLANGE	–	2 SIDES PER CORNER INSTALLATION
T21A	ACCESS DOOR (18" W X 24" H)	–	SEE NOTE 6

ADT101080-8

ACCESSORIES SCHEDULE NOTES:

1. THE MANUFACTURERS LISTED ARE FOR REFERENCE ONLY TO GUIDE SELECTION OF PRODUCTS.
2. "ASI" IN THE MANUFACTURER REFERENCE NUMBER COLUMN OF THE ACCESSORIES SCHEDULE DENOTES AMERICAN SPECIALTIES, INC.
3. "B" IN THE MANUFACTURER REFERENCE NUMBER COLUMN OF THE ACCESSORIES SCHEDULE DENOTES BOBRICK EQUIPMENT, INC.
4. AS SPECIFIED IN 15440. FOR BI-LEVEL WATER COOLER'S MOUNTING HT = 3'-0" MAX TO T/SPIGOT PER ADA.
5. WOOD BLOCKING AND METAL PLATE BACKING IS REQUIRED IN STEEL STUD AND GYPSUM WALLS FOR ALL ITEMS THAT ARE ATTACHED TO THE WALL.
6. AS SPECIFIED IN 08311. RECESSED PANEL OR AT CERAMIC TILE WALL – ALIGN TO FIT TILE GRID, B/ OPENING AT 8" AFF.

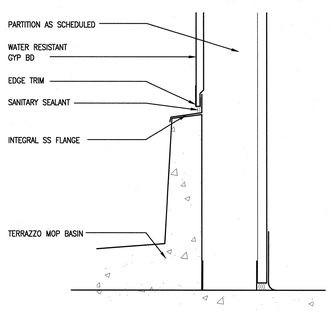

12 A5.21.40 TERRAZZO MOP BASIN

SCALE: 3"= 1'-0" ADT108011-8

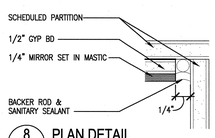

8 A5.21.40 PLAN DETAIL

SCALE: NTS ADT108009-8

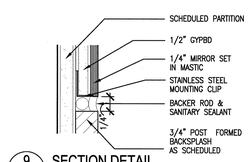

9 A5.21.40 SECTION DETAIL

SCALE: NTS ADT108008-8

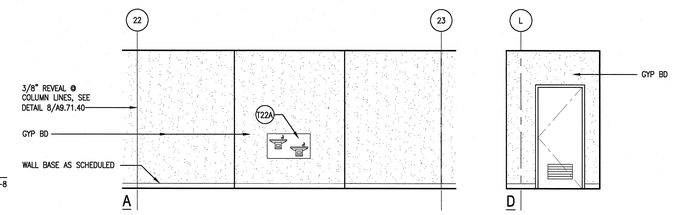

2 A5.21.40 TYPICAL ELEVATION AT DRINKING FOUNTAIN

1/4"=1'-0" AIE109-8

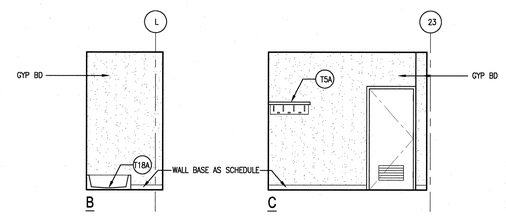

3 A5.21.40 TYPICAL ELEVATION AT DRINKING FOUNTAIN

1/4"=1'-0" AIE109-8

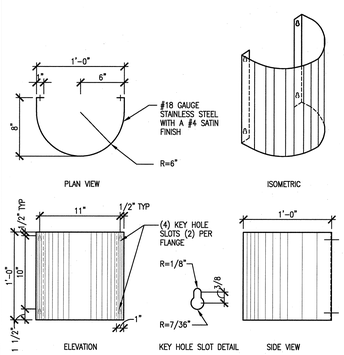

13 A5.21.40 TYPICAL LAVATORY PROTECTIVE ENCLOSURE

SCALE: 1 1/2"=1'-0" ADT108120-8

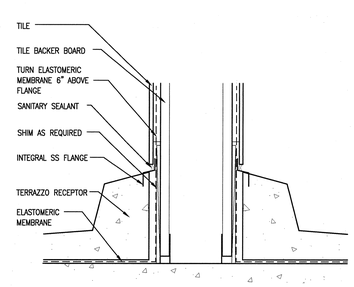

10 A5.21.40 SHOWER RECEPTOR

SCALE: 3"= 1'-0" ADT108100-8

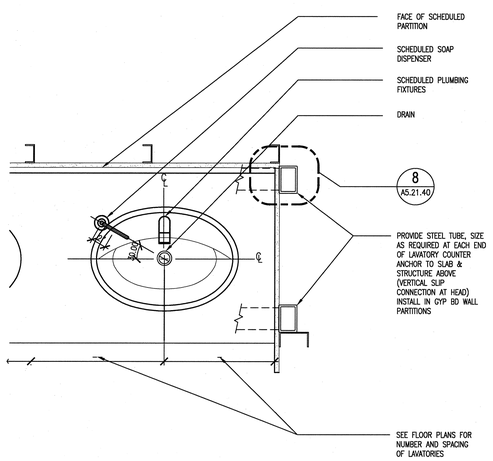

7 A5.21.40 TYPICAL LAVATORY ACCESSORY LOCATIONS

SCALE: NTS ADT108006-8

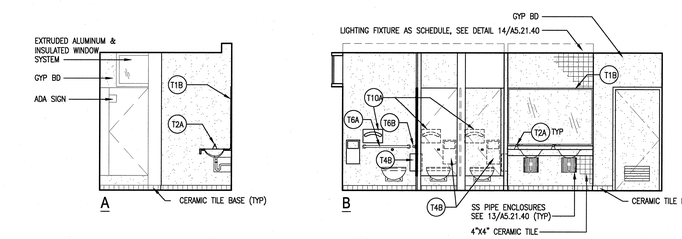

4 A5.21.40 TYPICAL WOMEN'S TOILET ROOM ELEVATIONS

1/4"=1'-0" AIE109-8

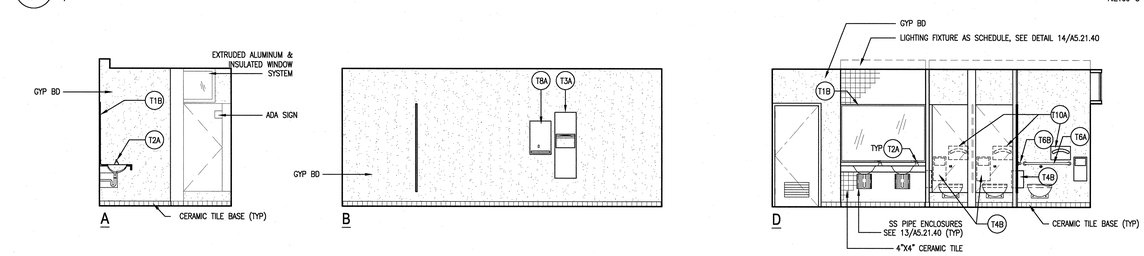

5 A5.21.40 TYPICAL MEN'S TOILET ROOM ELEVATIONS

1/4"=1'-0" AIE109-8

NO REPRESENTATION OR WARRANTY, EXPRESSED OR IMPLIED, IS MADE AS TO THE ACCURACY, COMPLETENESS OR USEFULNESS OF THE INFORMATION OR STATEMENTS CONTAINED IN THESE DRAWINGS, OR THAT THE USE OR DISCLOSURE OF ANY INFORMATION, APPARATUS, METHOD, OR PROCESS DISCLOSED IN THESE DRAWINGS MAY NOT INFRINGE PRIVATE RIGHTS OF OTHERS. NO LIABILITY IS ASSUMED WITH RESPECT TO THE USE OF, OR FOR DAMAGES RESULTING FROM THE USE OF ANY INFORMATION, APPARATUS, METHOD, OR PROCESS DISCLOSED IN THESE DRAWINGS. DRAWINGS MADE AVAILABLE FOR INFORMATION TO BIDDER ARE NOT TO BE USED FOR OTHER PURPOSES AND ARE TO BE RETURNED UPON REQUEST OF THE FORWARDING CONTRACTOR.

NUMBER OF SECTION OR DETAIL — DRAWING ON WHICH SECTION OR DETAIL IS SHOWN OR TAKEN

SECTION AND DETAIL KEY

THIS DOCUMENT CONTROLLED BY

CHANGE CONTROL SYSTEM _____

ENGINEERING PROCEDURE _____

REV	CHANGE "FIRE"	CHANGE CONTROL SYSTEM	CHANGE REQUEST NUMBER	DESCRIPTION	DSN	CHK	DEPT	DATE	PE	DATE	PE	DATE	REQ	DATE	UTB	DATE	RPE	RPE NO	DATE	ST	CV	EC	EE	EM	IE	M	PD	SE	AR
0				CERTIFIED FOR CONSTRUCTION-12/9/02	CF	ED											RLB	102104	12/9/02	RZ	AW	BWJ	AK	IM	DM	--	BNJ	--	TW

REVISION OR ISSUE PURPOSE — REVISION APPROVALS — SQUAD CHECK

RPE: ROBERT L. BARNES, REGISTERED ARCHITECT, NO. 102104, STATE OF TENNESSEE — 12/09/02

REV.	DATE			
		DSN	C. FINFROCK	12/9/02
		DRW	I-W WANG	12/9/02
		CHK	E. DENSON	12/9/02
		DEPT		
		PE	CLG	12/9/02
		PJ	JS	12/9/02
		REQ		12/9/02
		UTB	JRL	

DRAWING APPROVALS

UT-BATTELLE

Oak Ridge National Laboratory
managed for the DEPARTMENT OF ENERGY under U.S. GOVERNMENT contract DE-AC05-00OR22725
UT-BATTELLE, LLC. • Oak Ridge, Tennessee

PROJECT NAME:
CENTER FOR NANOPHASE MATERIALS SCIENCES
ENLARGED TOILET ROOM
PLANS, INTERIOR ELEVATIONS & DETAILS

1	48	49	50	PLANT	BLDG	FL	SH.	OF	TYPE	CLASS
3	A	X	X	8	8610		1	1	P	U
51		52		53						REV
NC		NA								0

A5.21.40