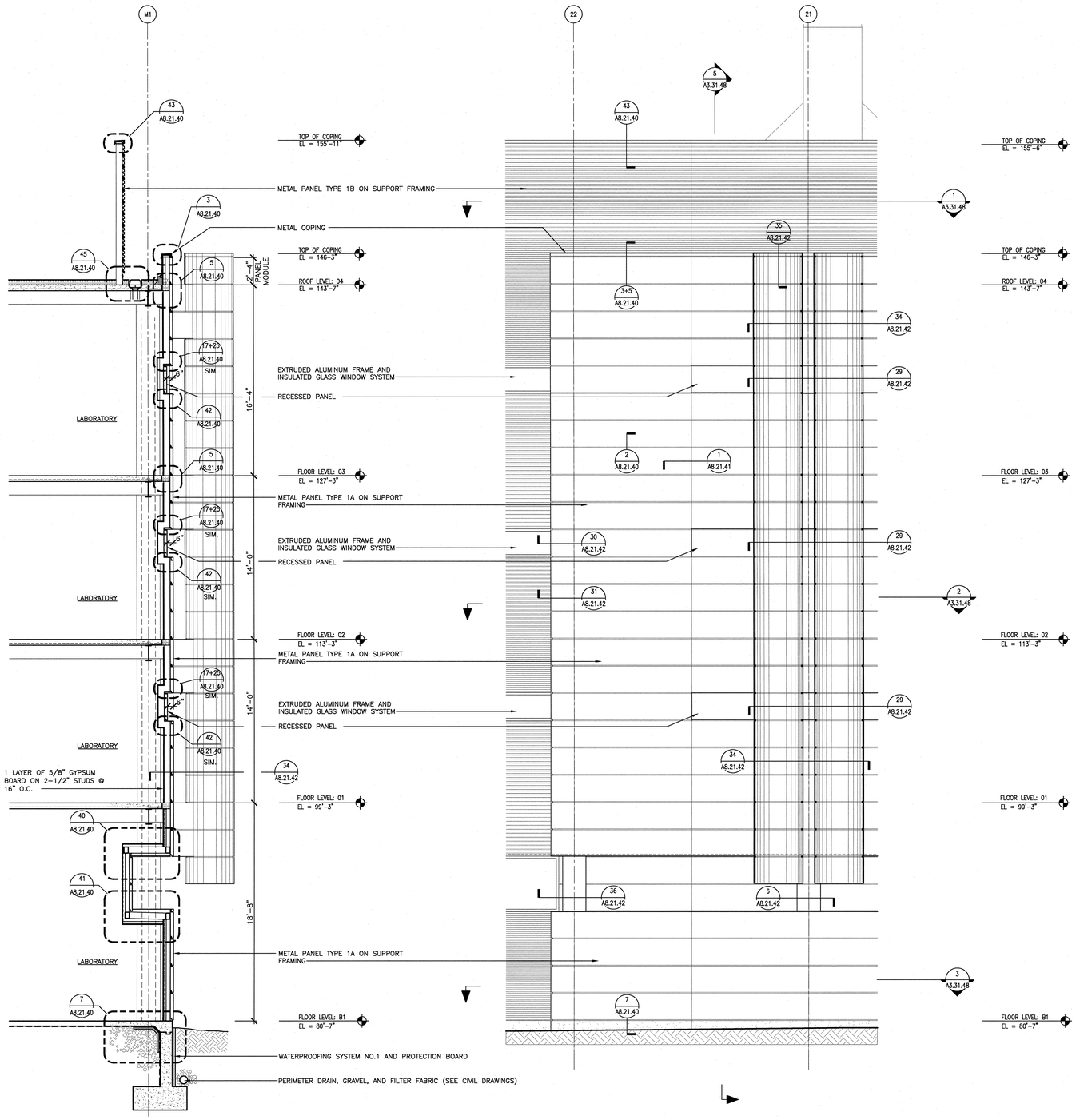

5 A3.31.48 SECTION LOOKING WEST
SCALE: 1/4"=1'-0" AWS008-8

4 A3.31.48 PARTIAL NORTH ELEVATION
SCALE: 1/4"=1'-0" AEE008-8

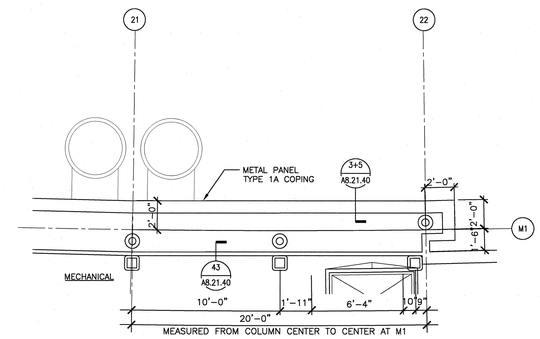

1 A3.31.48 PARTIAL PLAN - ROOF LEVEL
SCALE: 1/4"=1'-0" AFP004-8

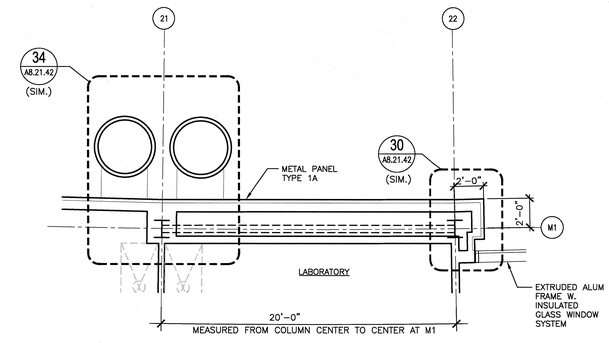

2 A3.31.48 PARTIAL PLAN - LEVEL 1 TO LEVEL 3
SCALE: 1/4"=1'-0" AFP020-8

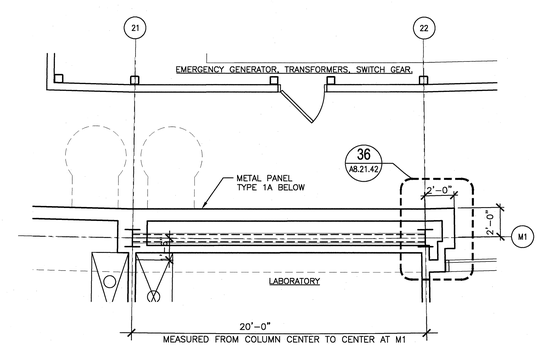

3 A3.31.48 PARTIAL PLAN - LEVEL B1
SCALE: 1/4"=1'-0" AFPB10-8

NO REPRESENTATION OR WARRANTY, EXPRESSED OR IMPLIED, IS MADE AS TO THE ACCURACY, COMPLETENESS OR USEFULNESS OF THE INFORMATION OR STATEMENTS CONTAINED IN THESE DRAWINGS, OR THAT THE USE OR DISCLOSURE OF ANY INFORMATION, APPARATUS, METHOD, OR PROCESS DISCLOSED IN THESE DRAWINGS MAY NOT INFRINGE PRIVATE RIGHTS OF OTHERS. NO LIABILITY IS ASSUMED WITH RESPECT TO THE USE OF, OR FOR DAMAGES RESULTING FROM THE USE OF ANY INFORMATION, APPARATUS, METHOD, OR PROCESS DISCLOSED IN THESE DRAWINGS. DRAWINGS MADE AVAILABLE FOR INFORMATION TO BIDDER ARE NOT TO BE USED FOR OTHER PURPOSES AND ARE TO BE RETURNED UPON REQUEST OF THE FORWARDING CONTRACTOR.

NUMBER OF SECTION OR DETAIL
DRAWING ON WHICH SECTION OR DETAIL IS SHOWN OR TAKEN
SECTION AND DETAIL KEY

THIS DOCUMENT CONTROLLED BY
CHANGE CONTROL SYSTEM _____
ENGINEERING PROCEDURE _____

REV	CHANGE TYPE	CHANGE CONTROL SYSTEM	CHANGE CONTROL NUMBER	DESCRIPTION	DSN	CHK	DEPT	DATE	PE	DATE	PM	DATE	REQ	DATE	UTB	DATE	RPE	RPE NO	DATE	ST	CV	EC	EE	EM	IE	M	PD	SE	AR
0	–	–	–	CERTIFIED FOR CONSTRUCTION–12/9/02	CF	ED		12/9/02		12/9/02		12/9/02					RLB	102104	12/9/02	RZ	AW	BWJ	AK	IM	DM	--	BWJ	--	TW

REVISION OR ISSUE PURPOSE — REVISION APPROVALS — SQUAD CHECK

RPE: ROBERT L. BARNES, REGISTERED ARCHITECT, AGENCY NO. 102104, STATE OF TENNESSEE — 12/9/02

DSN	C. FINFROCK	12/9/02
DRW	I-W WANG	12/9/02
CHK	E. DENSON	12/9/02
DEPT		
PE	CLG	12/9/03
PJ	JS	12/9/03
REQ		12/9/03
UTB	JRL	

REV. DATE — DRAWING APPROVALS

ORNL DRAWING NUMBER:

Knight/Jacobs Joint Venture
701 Scarboro Road, MS 8253
Oak Ridge, TN 37830
865-241-9433
fax 865-241-3400

m+w zander
M+W Zander U.S. Operations, Inc.
549 West Randolph Street
Chicago, IL 60661
Telephone: (312) 577-3200
Fax: (312) 577-3525

UT-BATTELLE
Oak Ridge National Laboratory
managed for the DEPARTMENT OF ENERGY under U.S. GOVERNMENT contract DE-AC05-00OR22725
UT-BATTELLE, LLC. + Oak Ridge, Tennessee

PROJECT NAME:
CENTER FOR NANOPHASE MATERIALS SCIENCES
WALL SECTIONS, PARTIAL ELEVATIONS
PARTIAL PLANS
BETWEEN COLUMN 21 & 22 (NORTH)

1	48	49	50	PLANT	BLDG	FL	SH.	OF	TYPE	CLASS
3	A	X	X	8	8610		1	1	P	U
51		52		53	A/E DRAWING NUMBER:					REV
NC		NA			A3.31.48					0

Date: 03/13/2002 Time: 10:53:04
Filename: 8610CM
Pen-set: MPW-FABRICATION.tmplt/plot-type: MS-Type1 (K-PLOT.pc3)/ctb-file: MPW-FABRICATION.ctb
AutoCAD 2000 Release 14.1 Win