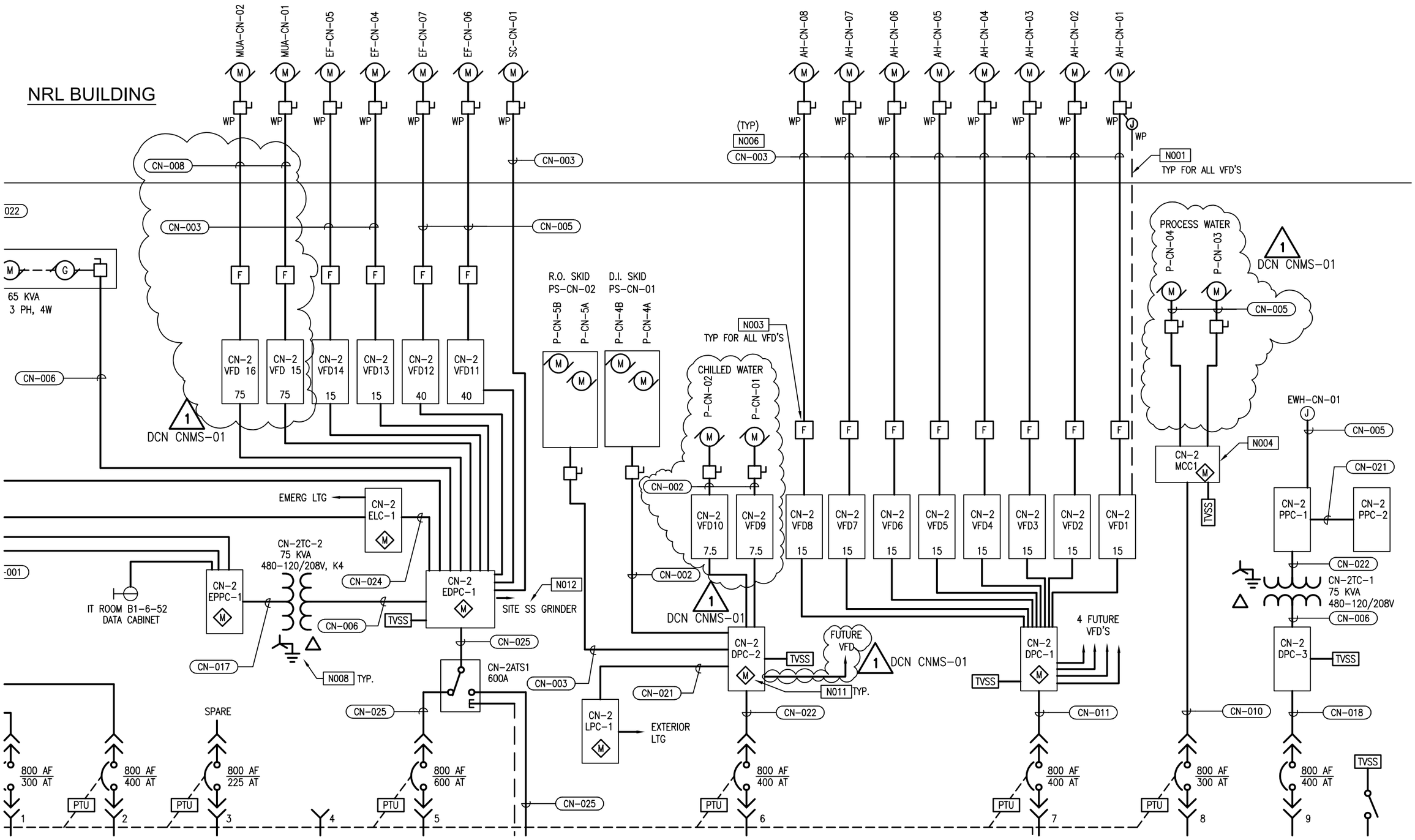

CENTER FOR NANOPHASE MATERIALS SCIENCES

Knight/Jacobs Joint Venture
701 Scarboro Road, MS 8253
Oak Ridge, TN 37830

865-241-9433
865-241-3400

m+w zander

M+W Zander U.S. Operations, Inc.
1453 Mission Street, 2nd Floor
San Francisco, CA 94103
Telephone: (415) 552-1777
Fax: (415) 864-3681

ORNL - CNMS TITLE III

SKETCH TITLE			SKETCH NO.	
SINGLE LINE DIAGRAM			E-SK-014-08	
DATE ISSUED	DRAWN BY	CHECKED BY	DRAWING NO.	DRAWING REV.
4/17/03	TM	CWR	E2.12.41	0
PROJECT NO.	FILE NAME	SCALE	DCN OR RFI NO.	
L0230.30	E-SK-014-8	NONE	DCN-CNMS-01	