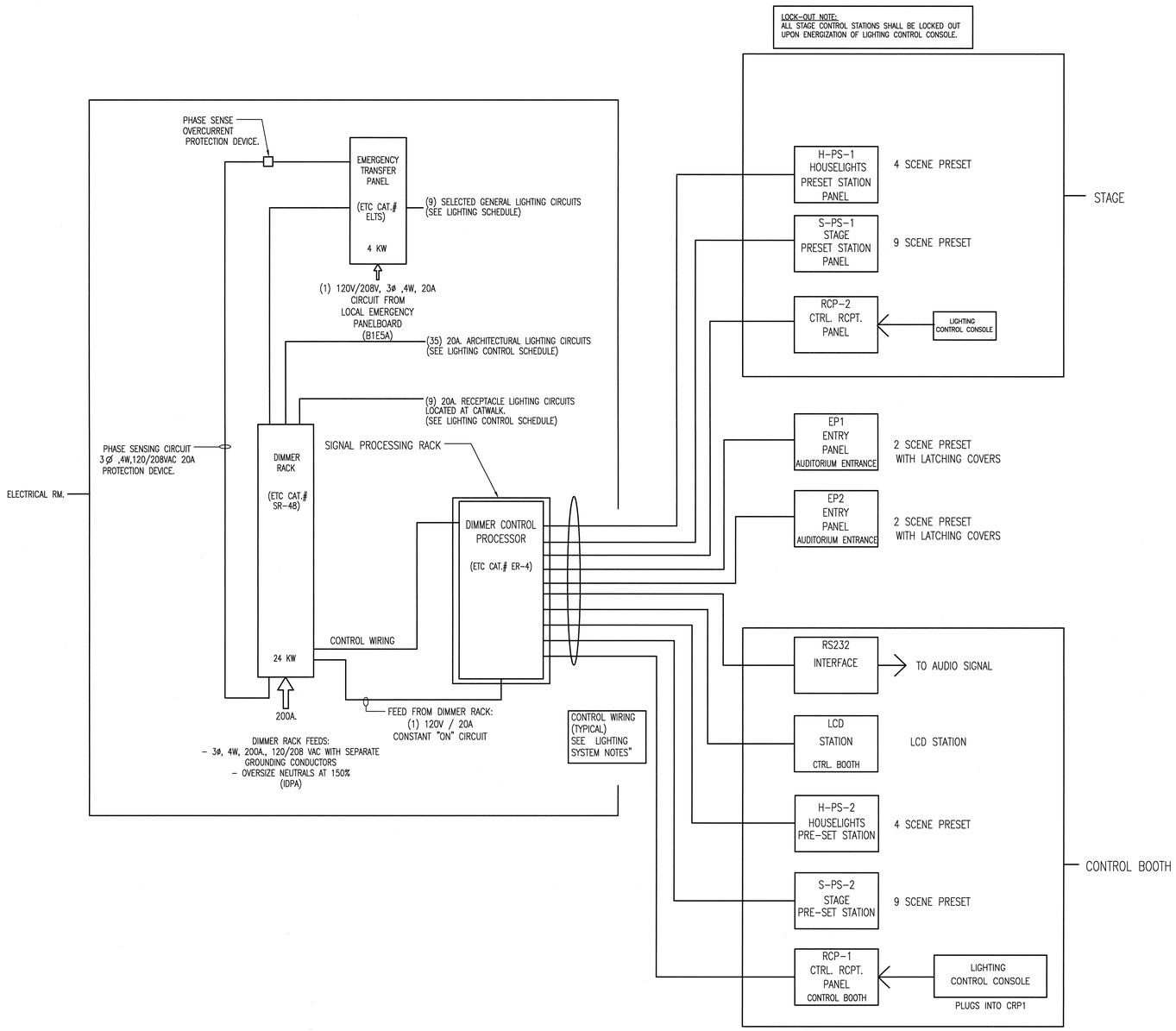

1 LIGHTING CONTROL SINGLE LINE DIAGRAM FOR AUDITORIUM LIGHTING
SCALE: NONE
(SEE NOTE 6)

LIGHTING SYSTEM NOTES:

1. ALL DEVICES PROVIDED BY STAGE LIGHTING MANUFACTURER UNLESS NOTED OTHERWISE.
2. ALL LOAD CIRCUITS ARE TWO WIRE: NO SHARED NEUTRALS ARE PERMITTED.
3. TYPICAL DIMMING SYSTEM ALLOWS FOR 80% LOADING OF 2.4KW ON 20A. CIRCUITS.
4. CONTROL WIRING REQUIREMENTS VARY GREATLY AMONG MANUFACTURERS. ELECTRICAL CONTRACTOR SHALL OBTAIN CONTROL WIRING REQUIREMENTS FROM STAGE LIGHTING MANUFACTURER PRIOR TO BID.
5. ALL CONTROL WIRING RUNS SHALL BE CONTINUOUS AND WITHOUT BREAKS OR SPLICES.
5. ALL FLUORESCENT DIMMING BALLASTS BY ADVANCE SERIES-MARK X. REFER TO LIGHTING CONTROL SCHEDULE FOR EXACT NUMBER OF DIMMERS.
6. ELECTRONIC THEATRE CONTROLS (ETC) REGIONAL REPRESENTATIVES: (WESTERN REGION) LAKESIDE DIMMING, CONTACT: BOB TAYLOR (901)475-0527 (EASTERN REGION) MALCOM MIMS & ASSOCIATES, CONTACT: RON GASSER (615)329-3041
7. THE DIMMING SYSTEM IS LUTRON.

KEYED NOTES:

N001 1 TWISTED/SHIELDED PAIR #18 (1.0 MM)^2 AND 3 #18 (1.0 MM)^2

N002 1 TWISTED/SHIELDED PAIR #18 (1.0 MM)^2 AND 2 #12 (2.5 MM)^2

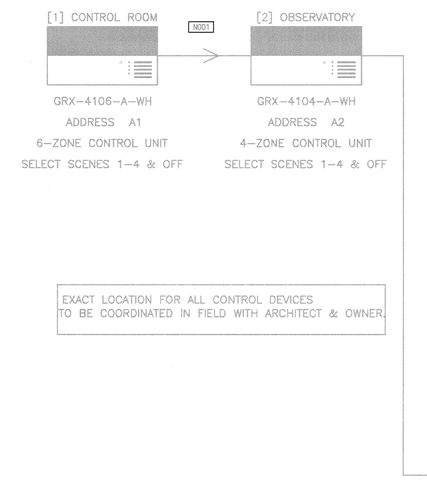

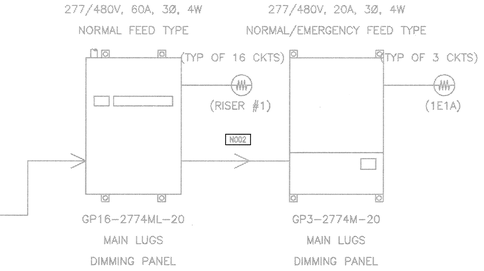

2 LIGHTING CONTROL SINGLE LINE DIAGRAM FOR CONTROL ROOM LIGHTING
SCALE: NONE
(SEE NOTE 7)

NO REPRESENTATION OR WARRANTY, EXPRESSED OR IMPLIED, IS MADE AS TO THE ACCURACY, COMPLETENESS OR USEFULNESS OF THE INFORMATION OR STATEMENTS CONTAINED IN THESE DRAWINGS, OR THAT THE USE OR DISCLOSURE OF ANY INFORMATION, APPARATUS, METHOD, OR PROCESS DISCLOSED IN THESE DRAWINGS MAY NOT INFRINGE PRIVATE RIGHTS OF OTHERS. NO LIABILITY IS ASSUMED WITH RESPECT TO THE USE OF, OR FOR DAMAGES RESULTING FROM THE USE OF ANY INFORMATION, APPARATUS, METHOD, OR PROCESS DISCLOSED IN THESE DRAWINGS. DRAWINGS MADE AVAILABLE FOR INFORMATION TO BIDDER ARE NOT TO BE USED FOR OTHER PURPOSES AND ARE TO BE RETURNED UPON REQUEST OF THE FORWARDING CONTRACTOR.

NUMBER OF SECTION OR DETAIL
DRAWING ON WHICH SECTION OR DETAIL IS SHOWN OR TAKEN
SECTION AND DETAIL KEY

THIS DOCUMENT CONTROLLED BY
CHANGE CONTROL SYSTEM 4
ENGINEERING PROCEDURE SNS-ENG-0001

REV	CHANGE TYPE	CHANGE CONTROL SYSTEM	CHANGE REQUEST NUMBER	DESCRIPTION	DSN	CHK	DEPT	DATE	PE	DATE	PJ	DATE	REQ	DATE	UTB	DATE	RPE	RPE NO	DATE	RW	AW	BWJ	PD	BWJ	BWJ	--	BWJ	--	ED
0				CERTIFIED FOR CONSTRUCTION - 12/20/01	TLW	KJS		9/8/01	RCS	9/21/01		12/20/01		12/20/01		12/20/01	VGS	106009	12/20/01										
																				ST	CV	EC	EE	EM	IE	M	PD	SE	AR

REVISION OR ISSUE PURPOSE — REVISION APPROVALS — SQUAD CHECK

RPE: VICTOR G. STEPHENS, REGISTERED ENGINEER, No. 091808, STATE OF TENNESSEE, 12-17-01

0 REV. 12-17-01 DATE

DSN	T. WHITE	12/20/01
DRW	T. WHITE	12/20/01
CHK	K.SZOT	12/20/01
DEPT		
PE		12/20/01
PJ		12/21/01
REQ		
UTB		12/26/01

DRAWING APPROVALS

108031400-E8E-8600-A225

Knight Jacobs
Knight/Jacobs Joint Venture
701 Scarboro Road, MS 8253
Oak Ridge, TN 37830
865-241-9433
fax 865-241-3400
KNIGHT Knight Advanced Technology
540 West Randolph Street Chicago, IL 60661

UT-BATTELLE
Oak Ridge National Laboratory
managed for the DEPARTMENT OF ENERGY under U.S. GOVERNMENT contract DE-AC05-00OR22725
UT-BATTELLE, LLC. • Oak Ridge, Tennessee

PROJECT NAME:
SPALLATION NEUTRON SOURCE
CENTRAL LAB AND OFFICE BUILDING
ELECTRICAL LIGHTING
SINGLE LINE DIAGRAMS - ALT. #1C

1	48	49	50	PLANT	BLDG	FL	SH.	OF	TYPE	CLASS
3	E	X	X	8	8600		1	1	S	U
51		52		53	WBS	E9.21.55.A1				REV
NC		NA			1.8.3.14					0

AutoCAD

Date: 12/13/2001 Time: 11:18:04
Username: BARTZS
CH:\P_WORKPACKETS\7000\700_CAD\DWG_BR\140_FLT\E9-21-55-A1.DWG