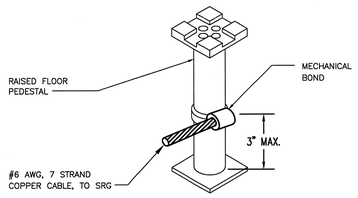

12 / E4.01.64 BONDING SRG RAISED FLOOR PEDESTAL
SCALE: NOT TO SCALE

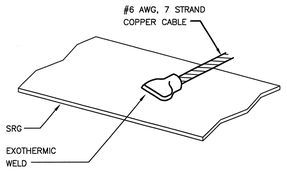

13 / E4.01.64 CABLE CONNECTION TO SRG
SCALE: NOT TO SCALE

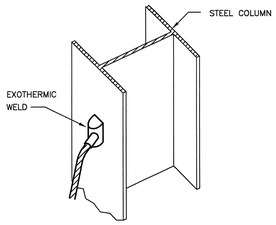

14 / E4.01.64 CABLE CONNECTION TO BUILDING STEEL
SCALE: NOT TO SCALE

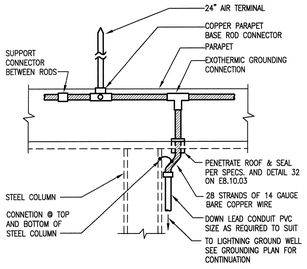

15 / – LIGHTNING PROTECTION AIR TERMINAL CONDUCTOR TO MAIN GROUND GRID CONNECTION DETAIL
SCALE: NOT TO SCALE

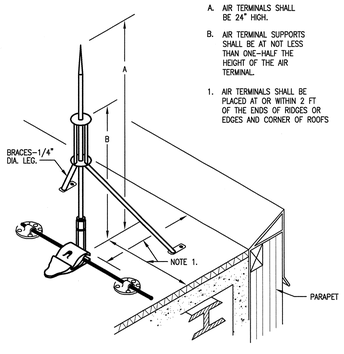

16 / – AIR TERMINAL SUPPORT DETAIL
SCALE: NOT TO SCALE

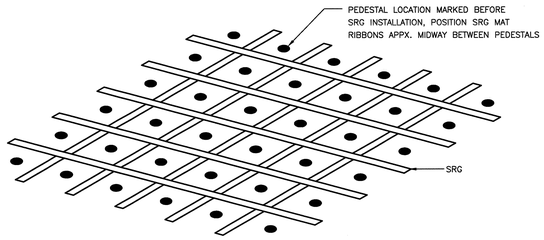

7 / E4.01.64 INITIAL POSITIONING OF SRG
SCALE: NOT TO SCALE

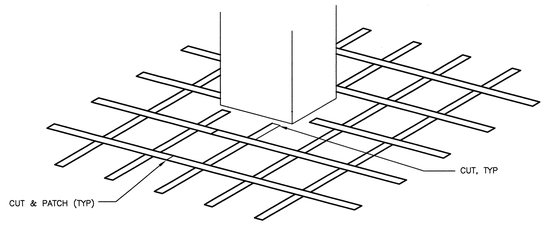

8 / E4.01.64 CUT AND PATCH SRG AROUND COLUMN
SCALE: NOT TO SCALE

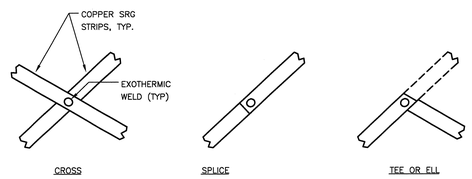

9 / E4.01.64 TYPICAL SRG CONNECTIONS OR PATCHING
SCALE: NOT TO SCALE

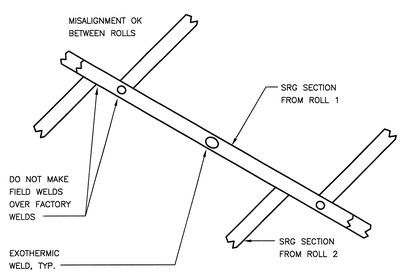

10 / E4.01.64 CONNECTION OF ADJACENT SRG ROLLS
SCALE: NOT TO SCALE

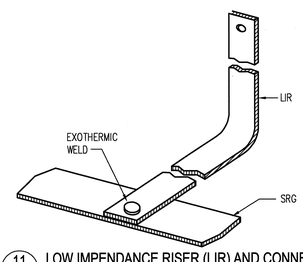

11 / E4.01.64 LOW IMPENDANCE RISER (LIR) AND CONNECTION TO SRG
SCALE: NOT TO SCALE

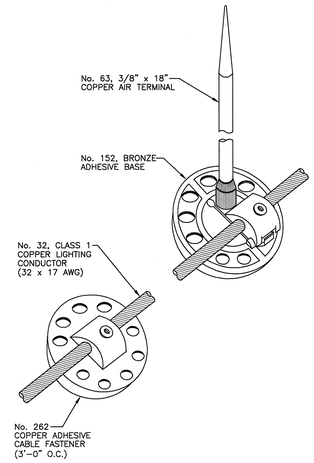

4 / – AIR TERMINAL
SCALE: NOT TO SCALE

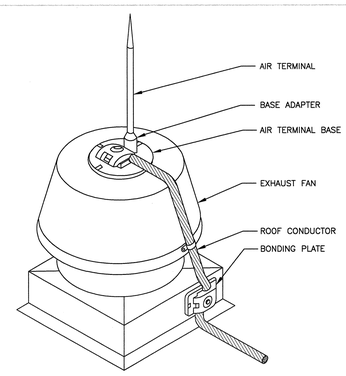

5 / – AIR TERMINAL AT EXHAUST FAN
SCALE: NOT TO SCALE

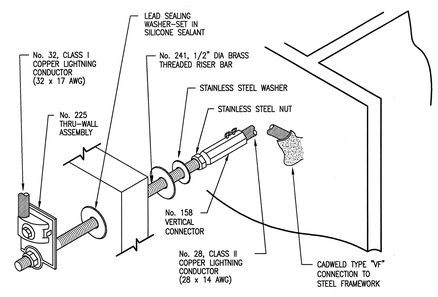

6 / – THRU-WALL LIGHTNING PROTECTION

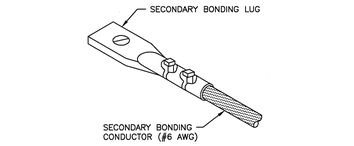

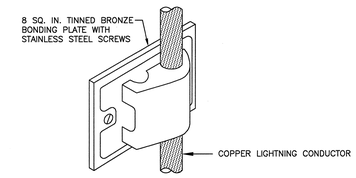

1 / – TYPICAL BONDING LIGHTNING PROTECTION
SCALE: NOT TO SCALE

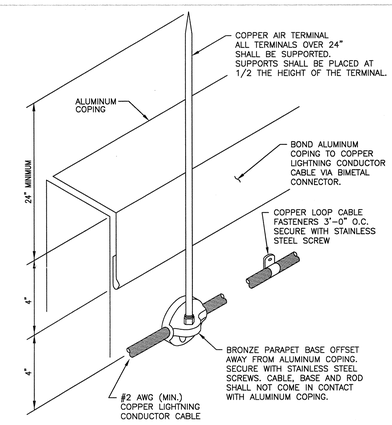

2 / – PARAPET AIR TERMINAL
SCALE: NOT TO SCALE

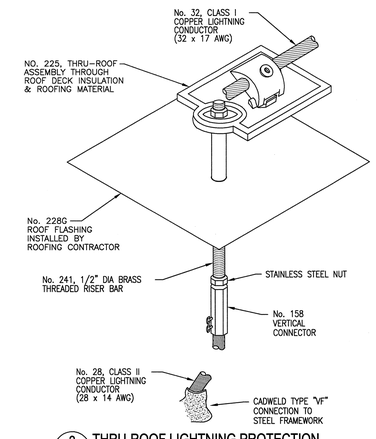

3 / – THRU-ROOF LIGHTNING PROTECTION
SCALE: NOT TO SCALE

108031400-E8E-8600-A121

Knight Jacobs
KnightJacobs Joint Venture
701 Scarboro Road, MS 8253
Oak Ridge, TN 37830
865-241-9433
fax 865-241-3400

KNIGHT
Knight Advanced Technology
4710 East Elwood, Suite 19
Phoenix, AZ 85040

UT-BATTELLE
Oak Ridge National Laboratory
managed for the DEPARTMENT OF ENERGY under U.S. GOVERNMENT contract DE-AC05-00OR22725
UT-BATTELLE, LLC. ● Oak Ridge, Tennessee

PROJECT NAME:
SPALLATION NEUTRON SOURCE
CENTRAL LAB AND OFFICE BUILDING
ELECTRICAL DETAILS
SHEET 3

1	48	49	50	PLANT	BLDG	FL	SH.	OF	TYPE	CLASS
3	E	X	X	8	8600		1	1	P	U
51		52		53	WBS					REV
NC		NA			1.8.3.14		E8.10.48			1

RPE	DSN	D.DANIELSON	5/15/01
	DRW	S. BARNETT	5/15/01
	CHK	R.LENNIG	5/15/01
	DEPT		
	PE	C.GARREN	10/1/01
	PJ	J. STELLERN	8/21/01
	REQ		
1 12-17-01	UTB	J.LAWSON	10/8/01
REV. DATE	DRAWING APPROVALS		

VICTOR G. STEFFEN, REGISTERED ENGINEER, No. 00106005, STATE OF TENNESSEE

REV	CHANGE TYPE	CHANGE CONTROL SYSTEM	CHANGE REQUEST NUMBER	DESCRIPTION	DSN	CHK	DEPT
1				CERTIFIED FOR CONSTRUCTION – 12/20/01	DD	RL	
0	–	–	–	CERTIFIED FOR CONSTRUCTION – 05/15/2001	DD	RL	

REVISION OR ISSUE PURPOSE

DATE	PE	DATE	PJ	DATE	REQ	DATE	UTB	DATE	RPE	RPE NO	DATE
	CLG	10/1/01	JS	08/21/01			JRL	10/8/01	VGS	106009	5/15/01
									VGS	106009	12/20/01

REVISION APPROVALS

ST	CV	EC	EE	EM	IE	M	PD	SE	AR
RW	AW	BWJ	PD	BWJ	BWJ	--	BWJ	--	ED

SQUAD CHECK

NO REPRESENTATION OR WARRANTY, EXPRESSED OR IMPLIED, IS MADE AS TO THE ACCURACY, COMPLETENESS OR USEFULNESS OF THE INFORMATION OR STATEMENTS CONTAINED IN THESE DRAWINGS, OR THAT THE USE OR DISCLOSURE OF ANY INFORMATION, APPARATUS, METHOD, OR PROCESS DISCLOSED IN THESE DRAWINGS MAY NOT INFRINGE PRIVATE RIGHTS OF OTHERS. NO LIABILITY IS ASSUMED WITH RESPECT TO THE USE OF, OR FOR DAMAGES RESULTING FROM THE USE OF ANY INFORMATION, APPARATUS, METHOD, OR PROCESS DISCLOSED IN THESE DRAWINGS. DRAWINGS MADE AVAILABLE FOR INFORMATION TO BIDDER ARE NOT TO BE USED FOR OTHER PURPOSES AND ARE TO BE RETURNED UPON REQUEST OF THE FORWARDING CONTRACTOR.

NUMBER OF SECTION OR DETAIL
DRAWING ON WHICH SECTION OR DETAIL IS SHOWN OR TAKEN
SECTION AND DETAIL KEY

THIS DOCUMENT CONTROLLED BY
CHANGE CONTROL SYSTEM 4
ENGINEERING PROCEDURE SNS-ENG-G001

Date: 05/21/2001 Time: 14:53:11
User: ulq
File: C:\PROJ\PROJ2370\DWG\100_DWG\SNA_2B\100_DWG\SNA_2B\140_PLUS\E8E8600.DWG