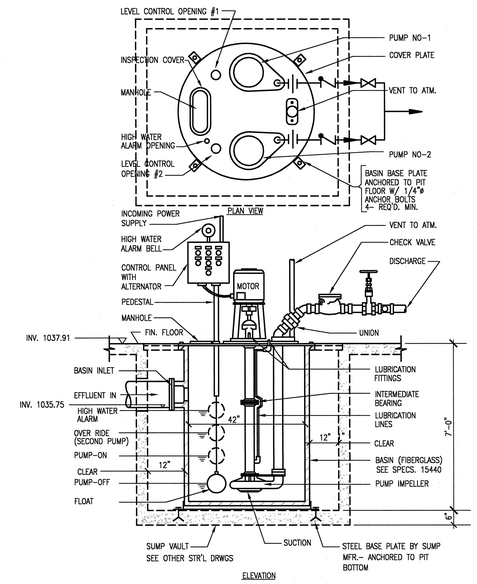

17 – VERTICAL LIFT DUPLEX SEWAGE EJECTOR

NOT TO SCALE

NO REPRESENTATION OR WARRANTY, EXPRESSED OR IMPLIED, IS MADE AS TO THE ACCURACY, COMPLETENESS OR USEFULNESS OF THE INFORMATION OR STATEMENTS CONTAINED IN THESE DRAWINGS, OR THAT THE USE OR DISCLOSURE OF ANY INFORMATION, APPARATUS, METHOD, OR PROCESS DISCLOSED IN THESE DRAWINGS MAY NOT INFRINGE PRIVATE RIGHTS OF OTHERS. NO LIABILITY IS ASSUMED WITH RESPECT TO THE USE OF, OR FOR DAMAGES RESULTING FROM THE USE OF ANY INFORMATION, APPARATUS, METHOD, OR PROCESS DISCLOSED IN THESE DRAWINGS. DRAWINGS MADE AVAILABLE FOR INFORMATION TO BIDDER ARE NOT TO BE USED FOR OTHER PURPOSES AND ARE TO BE RETURNED UPON REQUEST OF THE FORWARDING CONTRACTOR.

NUMBER OF SECTION OR DETAIL

DRAWING ON WHICH SECTION OR DETAIL IS SHOWN OR TAKEN

SECTION AND DETAIL KEY

THIS DOCUMENT CONTROLLED BY

CHANGE CONTROL SYSTEM 4

ENGINEERING PROCEDURE SNS-ENG-G001

REV	CHANGE TYPE	CHANGE CONTROL SYSTEM	CHANGE REQUEST NUMBER	DESCRIPTION	DSN	CHK	DEPT	DATE	PE	DATE	PJ	DATE	REQ	DATE	UTB	DATE	RPE	RPE NO	DATE	ST	CV	EC	EE	EM	IE	M	PD	SE	AR
0				CERTIFIED FOR CONSTRUCTION – MAY 15, 2001	EB	KJH			10/1/01		9/21/01				10/8/01		BWJ	105869	5/15/01	SC	AW	WRS	RL	WRS	BWJ	--	WRS	--	WAS

REVISION OR ISSUE PURPOSE — REVISION APPROVALS — SQUAD CHECK

DSN	M. WITHROW	05/15/01
DRW	T. WHITE JR.	05/15/01
CHK	B. JOHNSON	05/15/01
DEPT		
PE		10/1/01
PJ		9/21/01
REQ		
UTB		10/8/01

RPE: BRUCE W. JOHNSON, REGISTERED ENGINEER, AGRICULTURE, COMMERCE, No. 097108, STATE OF TENNESSEE

0 — REV. — 5/14/01 — DATE

DRAWING APPROVALS

108030000-P8E-8000-A002

Knight/Jacobs

Knight/Jacobs Joint Venture
701 Scarboro Road, MS 8253
Oak Ridge, TN 37830

865-241-9433
fax 865-241-3400

KNIGHT
Knight Advanced Technology
349 West Randolph Street
Chicago, IL 60601

UT-BATTELLE

Oak Ridge National Laboratory
managed for the DEPARTMENT OF ENERGY under
U.S. GOVERNMENT contract DE-AC05-00OR22725
UT-BATTELLE, LLC. ● Oak Ridge, Tennessee

PROJECT NAME:

SPALLATION NEUTRON SOURCE

CENTRAL LAB AND OFFICE BUILDING DETAILS

1	48	49	50	PLANT	BLDG	FL	SH.	OF	TYPE	CLASS
3	P	X	X	8	8000		1	1	D	U

51	52	53	WBS		REV
NC	NA		1.8.3	P6.10.02	0

05/14/2001 Time: 13:28:09
Drawing: 8000D007
H:\OLD\PROJECTS\7000\700_CNOF\DWG\N3K_CBF\745_PLOT\P6-10-02.DWG