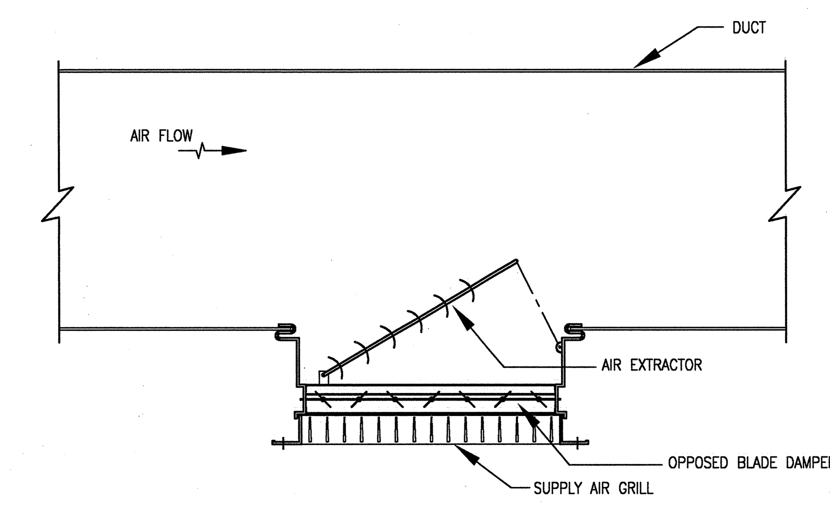

14 / – SUPPLY AIR REGISTER DETAIL
NOT TO SCALE

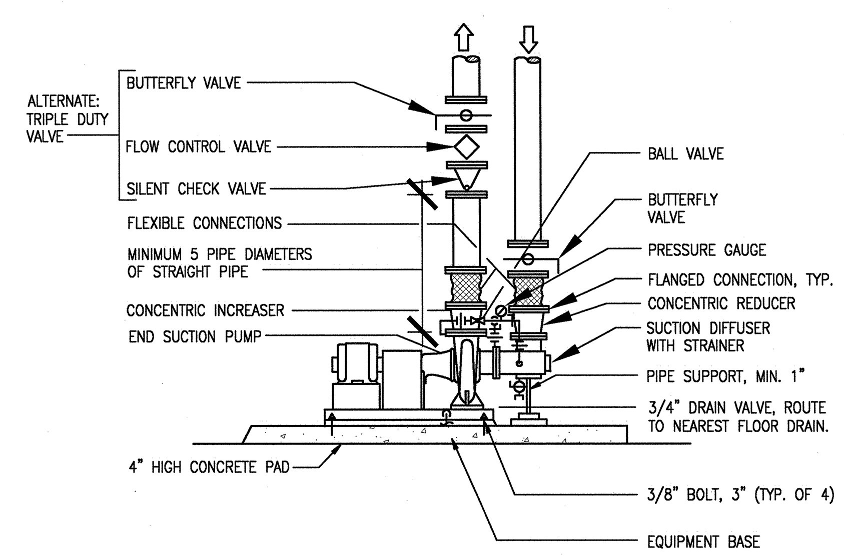

34 / – END SUCTION PUMP
NOT TO SCALE

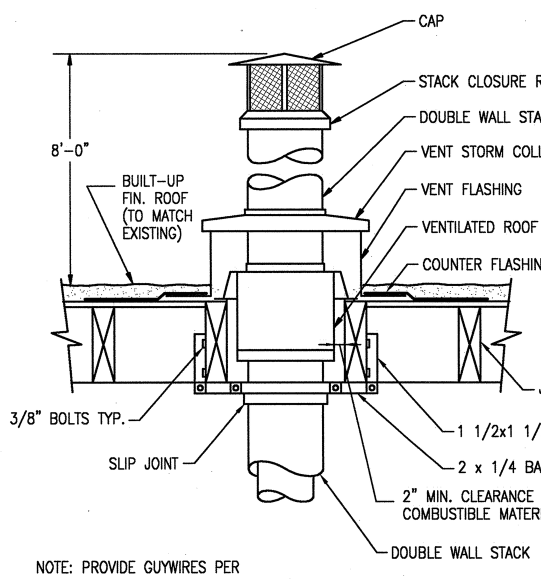

NOTE: PROVIDE GUYWIRES PER

18 / – DETAIL
NOT TO SCALE

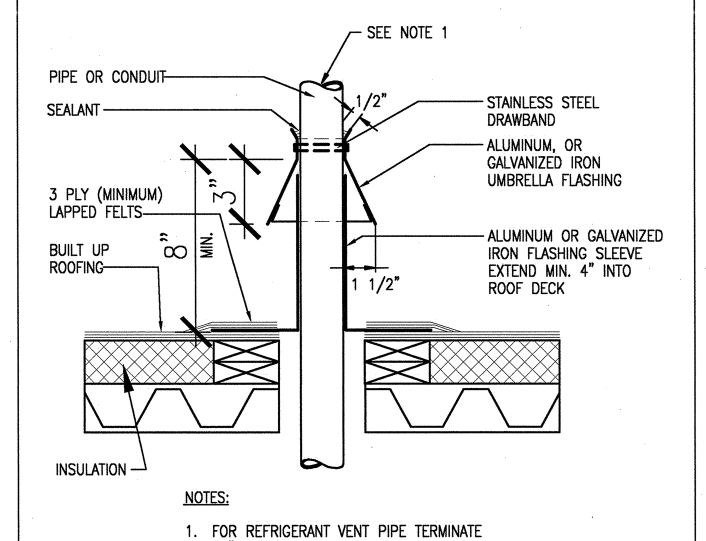

NOTES:
1. FOR REFRIGERANT VENT PIPE TERMINATE 12" ABOVE ROOF.

10 / – PIPE ROOF PENETRATION
NOT TO SCALE

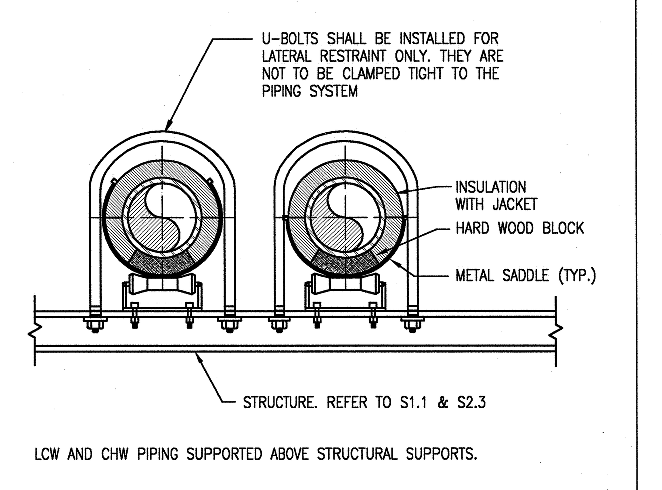

LCW AND CHW PIPING SUPPORTED ABOVE STRUCTURAL SUPPORTS.

2 / – SUPPORTS AND ANCHORS
NOT TO SCALE

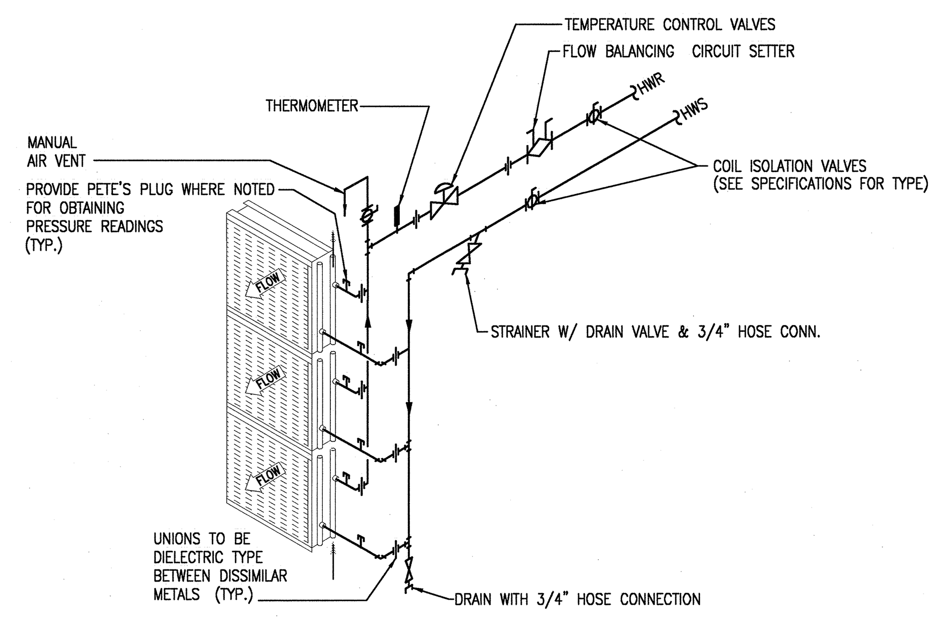

NOTE :
1. PROVIDE CLEARANCE OF PIPES FOR COIL REMOVAL.
2. SEE FLOOR PLAN FOR PIPE SIZES.
3. UNION OR FLANGE CONNECTION ON EACH SIDE OF CONTROL VALVE.
4. PROVIDE CLEARANCE OF PIPES FOR ALL CABINET ACCESS PANELS.

46 / – CHILLED WATER TRIPLE COIL PIPING - 2 WAY VALVE
NOT TO SCALE

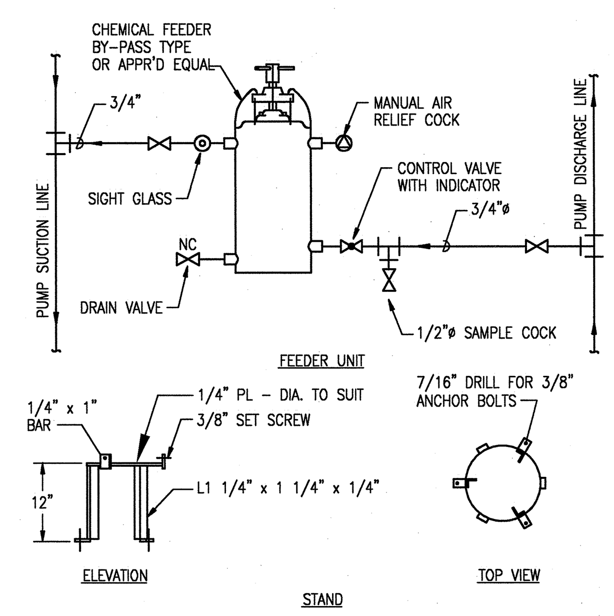

36 / – CHEMICAL FEEDER AND STAND DETAIL
NOT TO SCALE

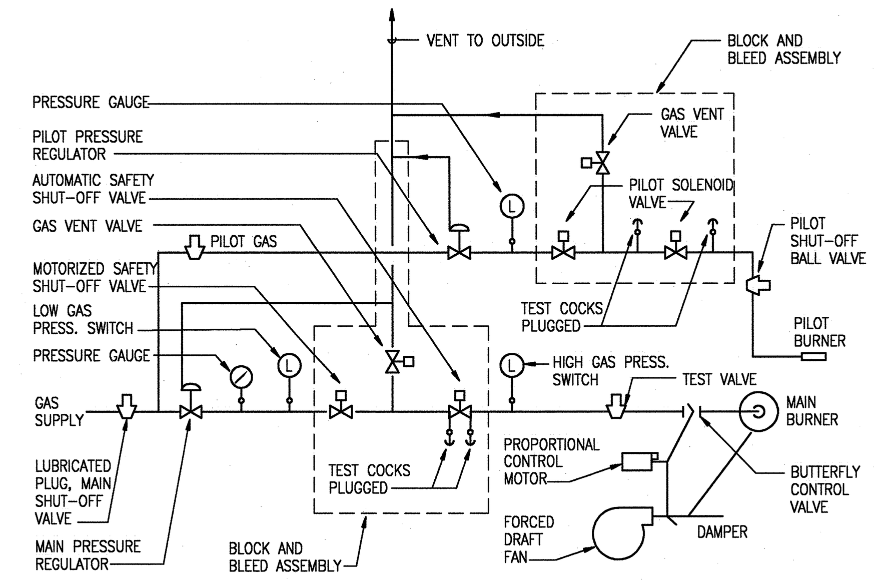

28 / – GAS TRAIN SCHEMATIC DIAGRAM
NOT TO SCALE

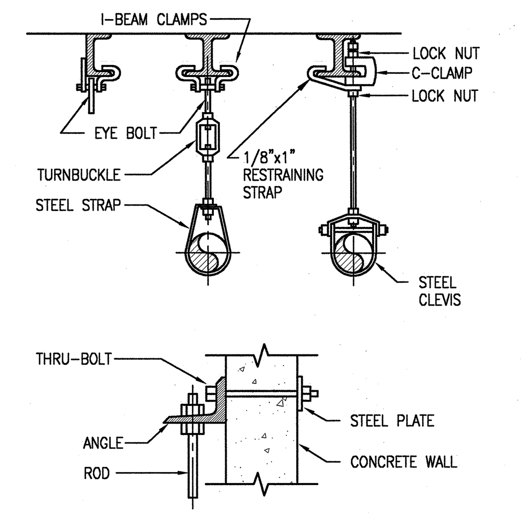

12 / – PIPE SUPPORTS
NOT TO SCALE

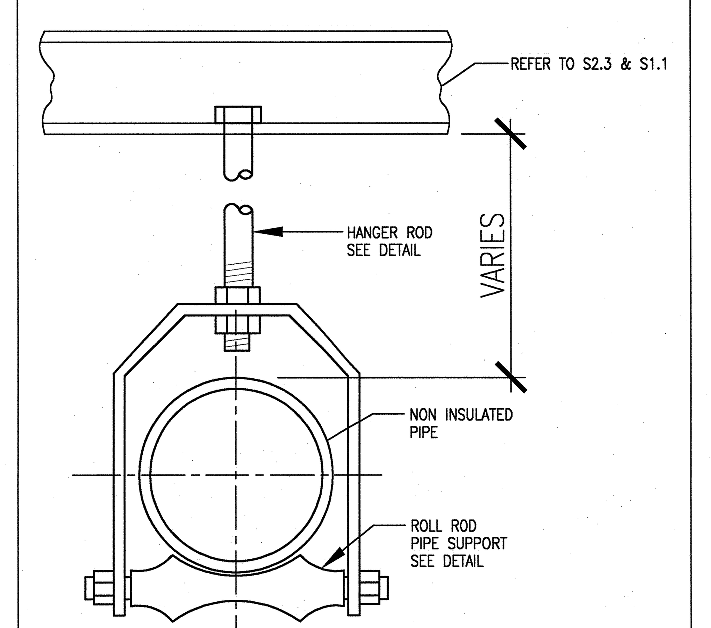

4 / – PIPE HANGER, NON INSULATED PIPE
NOT TO SCALE

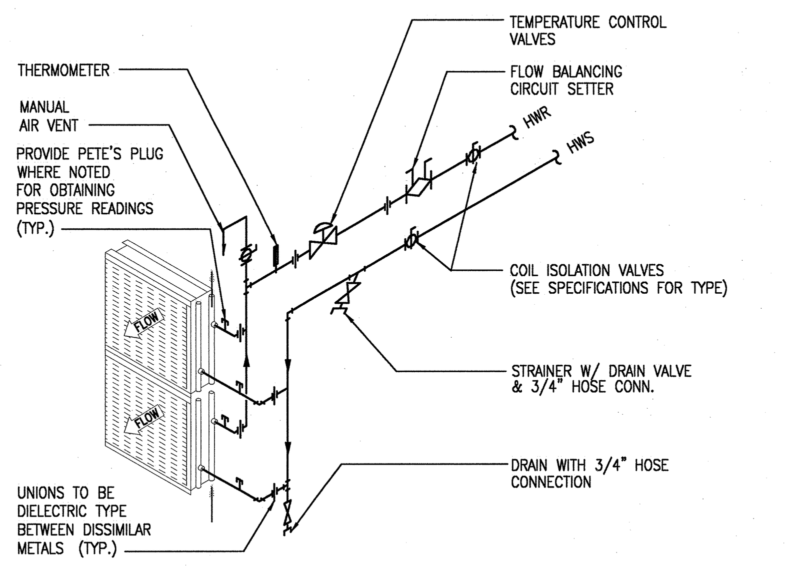

NOTE :
1. PROVIDE CLEARANCE OF PIPES FOR COIL REMOVAL.
2. SEE FLOOR PLAN FOR PIPE SIZES.
3. UNION OR FLANGE CONNECTION ON EACH SIDE OF CONTROL VALVE.
4. PROVIDE CLEARANCE OF PIPES FOR ALL CABINET ACCESS PANELS.

HOT WATER DOUBLE COIL
29 / – PIPING - 2 WAY VALVE
NOT TO SCALE

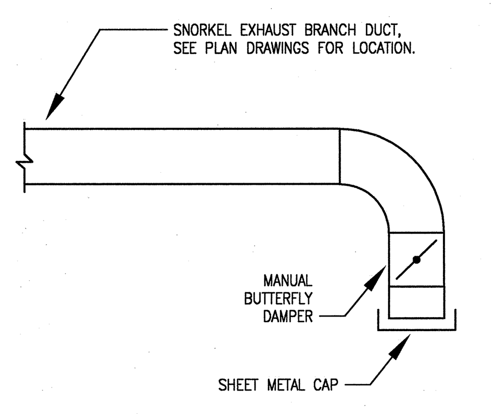

32 / – TYPICAL SNORKEL DUCT TERMINATION
NOT TO SCALE

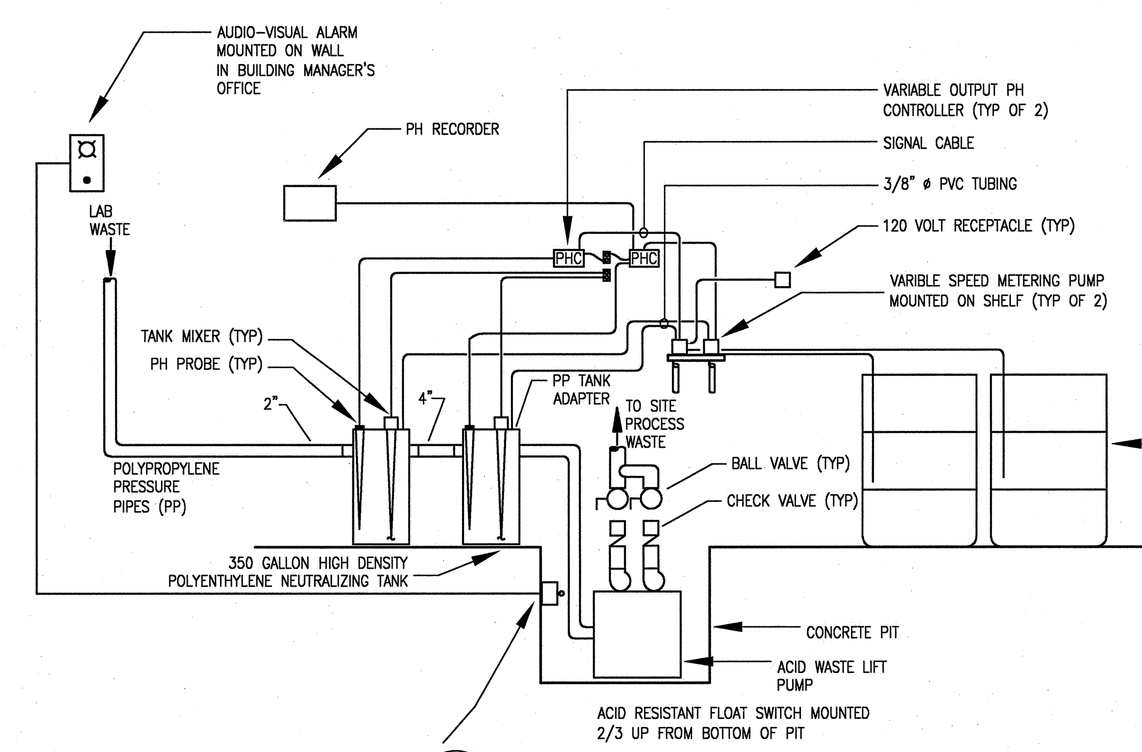

30 / – PH NEUTRALIZATION SYSTEM
NOT TO SCALE

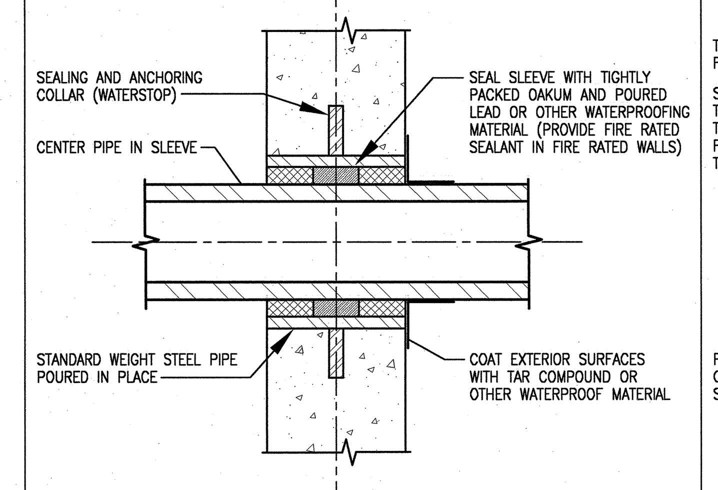

14 / – PIPE SLEEVE THRU EXTERIOR WALL
NOT TO SCALE

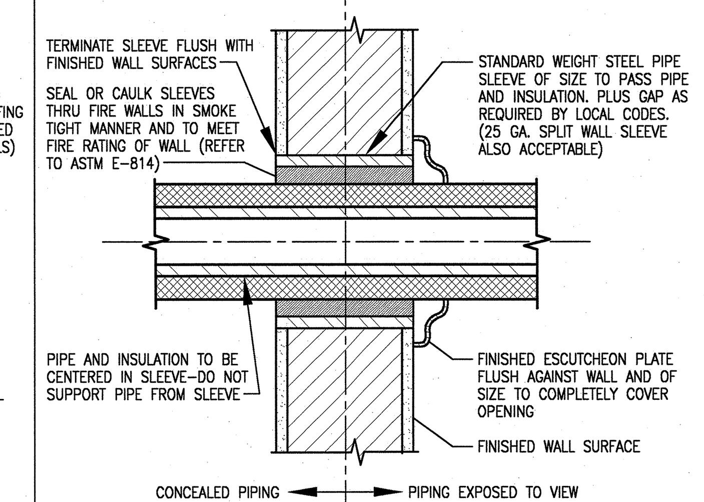

6 / – PIPE SLEEVE THRU INTERIOR WALL
NOT TO SCALE

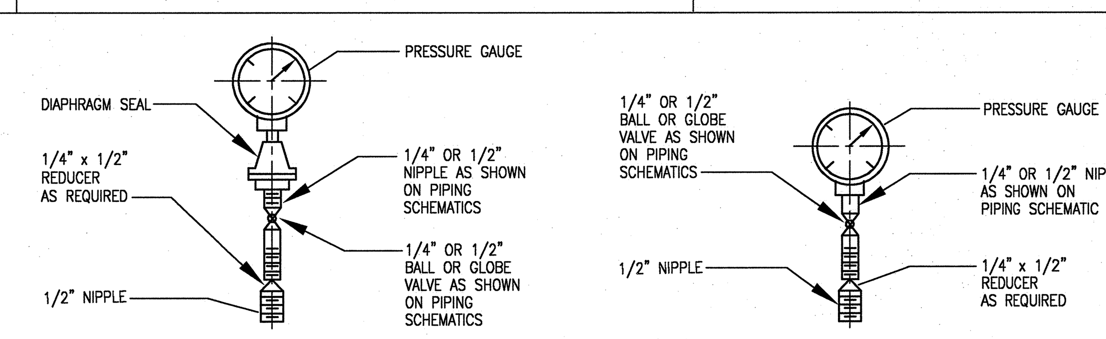

15 / – PRESSURE GAUGE MOUNTING
NOT TO SCALE

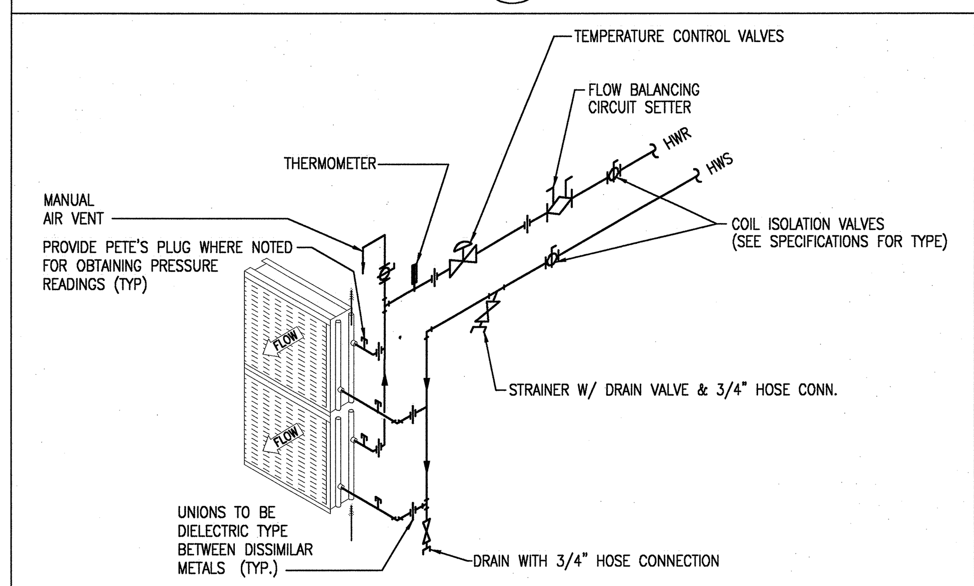

NOTE :
1. PROVIDE CLEARANCE OF PIPES FOR COIL REMOVAL.
2. SEE FLOOR PLAN FOR PIPE SIZES.
3. UNION OR FLANGE CONNECTION ON EACH SIDE OF CONTROL VALVE.
4. PROVIDE CLEARANCE OF PIPES FOR ALL CABINET ACCESS PANELS.

CHILLED WATER DOUBLE COIL
31 / – PIPING - 2 WAY VALVE
NOT TO SCALE

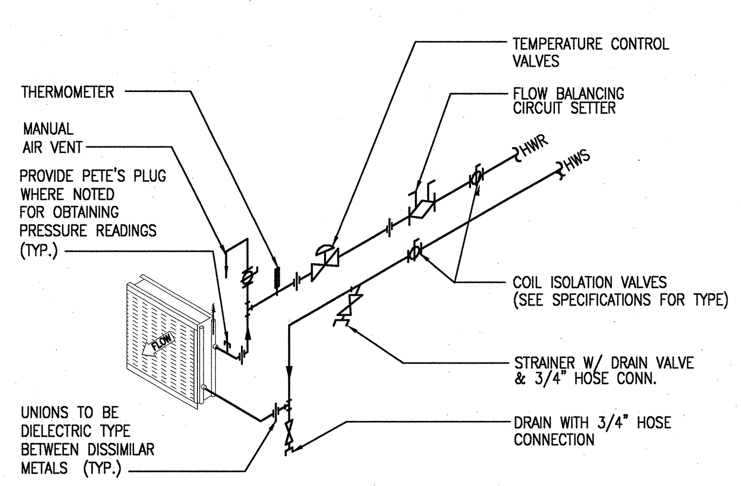

NOTE :
1. PROVIDE CLEARANCE OF PIPES FOR COIL REMOVAL.
2. SEE FLOOR PLAN FOR PIPE SIZES.
3. UNION OR FLANGE CONNECTION ON EACH SIDE OF CONTROL VALVE.
4. PROVIDE CLEARANCE OF PIPES FOR ALL CABINET ACCESS PANELS.

HOT WATER SINGLE COIL
16 / – PIPING - 2 WAY VALVE
NOT TO SCALE

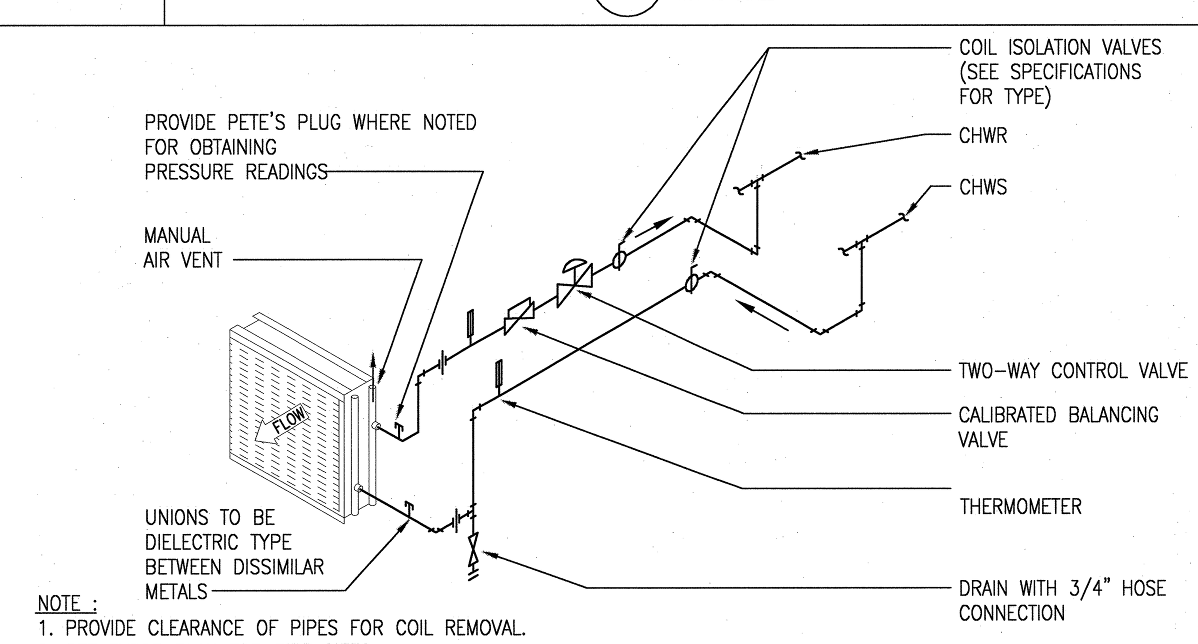

NOTE :
1. PROVIDE CLEARANCE OF PIPES FOR COIL REMOVAL.
2. SEE FLOOR PLAN FOR PIPE SIZES.
3. UNION OR FLANGE CONNECTION ON EACH SIDE OF CONTROL VALVE.
4. PROVIDE CLEARANCE OF PIPES FOR ALL CABINET ACCESS PANELS.

CHILLED WATER COIL
17 / – PIPING - 2 WAY VALVE
NOT TO SCALE

NO REPRESENTATION OR WARRANTY, EXPRESSED OR IMPLIED, IS MADE AS TO THE ACCURACY, COMPLETENESS OR USEFULNESS OF THE INFORMATION OR STATEMENTS CONTAINED IN THESE DRAWINGS, OR THAT THE USE OR DISCLOSURE OF ANY INFORMATION, APPARATUS, METHOD, OR PROCESS DISCLOSED IN THESE DRAWINGS MAY NOT INFRINGE PRIVATE RIGHTS OF OTHERS. NO LIABILITY IS ASSUMED WITH RESPECT TO THE USE OF, OR FOR DAMAGES RESULTING FROM THE USE OF ANY INFORMATION, APPARATUS, METHOD, OR PROCESS DISCLOSED IN THESE DRAWINGS. DRAWINGS MADE AVAILABLE FOR INFORMATION TO BIDDER ARE NOT TO BE USED FOR OTHER PURPOSES AND ARE TO BE RETURNED UPON REQUEST OF THE FORWARDING CONTRACTOR.

SECTION AND DETAIL KEY: NUMBER OF SECTION OR DETAIL / DRAWING ON WHICH SECTION OR DETAIL IS SHOWN OR TAKEN

THIS DOCUMENT CONTROLLED BY
CHANGE CONTROL SYSTEM 4
ENGINEERING PROCEDURE SNS-ENG-G001

REV	CHANGE TYPE	CHANGE CONTROL SYSTEM	CHANGE REQUEST NUMBER	DESCRIPTION	DSN	CHK	DEPT	DATE	PE	DATE	PJ	DATE	REQ	DATE	UTB	DATE	RPE	RPE NO	DATE
0				CERTIFIED FOR CONSTRUCTION – MAY 15, 2001	RTW	KJH			[signature]	10/1/01	[signature]	8/21/01			[signature]	10/8/01	BWJ	105869	5/14/01

REVISION OR ISSUE PURPOSE — REVISION APPROVALS

SC	AW	WRS	RL	WRS	BWJ	--	WRS	--	WAS
ST	CV	EC	EE	EM	IE	M	PD	SE	AR

SQUAD CHECK

RPE: BRUCE W. JOHNSON, REGISTERED ENGINEER, AGRICULTURE, COMMERCE, No. 00105869, STATE OF TENNESSEE
REV. 0 DATE 5/14/01

DSN	M. CORNELIUS	05/15/01
DRW	R. WATSON	05/15/01
CHK	B. JOHNSON	05/15/01
DEPT		
PE	[signature]	10/4/01
PJ	[signature]	9/21/01
REQ		
UTB	[signature]	10/8/01

DRAWING APPROVALS

108031400-H8E-8600-A083

Knight/Jacobs Joint Venture
701 Scarboro Road, MS 8253
Oak Ridge, TN 37830
865-241-9433
fax 865-241-3400

KNIGHT
Knight Advanced Technology
549 West Randolph Street
Chicago, IL 60661

UT-BATTELLE
Oak Ridge National Laboratory
managed for the DEPARTMENT OF ENERGY under U.S. GOVERNMENT contract DE-AC05-00OR22725
UT-BATTELLE, LLC, Oak Ridge, Tennessee

PROJECT NAME:
SPALLATION NEUTRON SOURCE
CENTRAL LAB AND OFFICE BUILDING
DETAILS
HVAC

1	48	49	50	PLANT	BLDG	FL	SH.	OF	TYPE	CLASS
3	H	X	X	8	8600		1	1	D	U
51	52			53	WBS					REV
NC	NA				1.8.3.14	H6.10.11				0