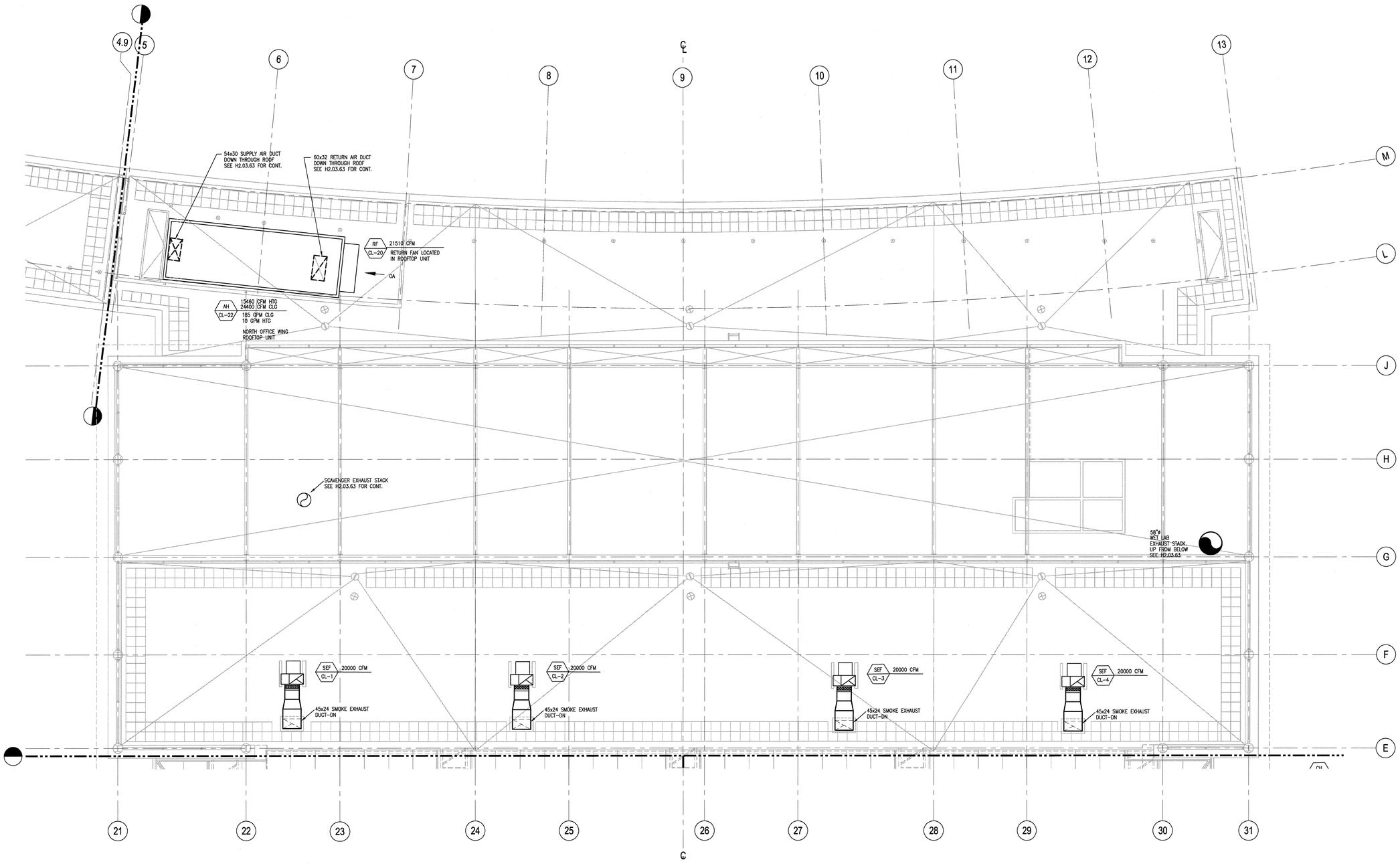

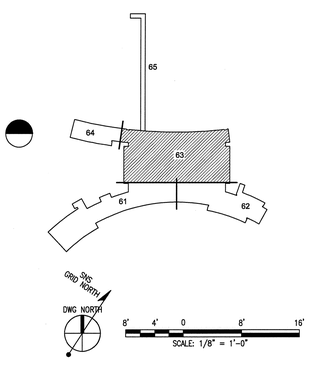

108031400-H8E-8600-A102

Knight/Jacobs Joint Venture
701 Scarboro Road, MS 8253
Oak Ridge, TN 37830
865-241-9433
fax 865-241-3400

KNIGHT
Knight Advanced Technology
540 West Randolph Street
Chicago, IL 60661

Oak Ridge National Laboratory
managed for the DEPARTMENT OF ENERGY under
U.S. GOVERNMENT contract DE-AC05-000R22725
UT-BATTELLE, LLC. ◆ Oak Ridge, Tennessee

PROJECT NAME:
SPALLATION NEUTRON SOURCE

CENTRAL LAB AND OFFICE BUILDING VENILATION ROOF PLAN LEVEL 4, SECTOR 63

1	4B	49	50	PLANT	BLDG	FL	SH.	OF	TYPE	CLASS
3	H	X	X	8	8600		1	1	P	U
51		52		53	WBS					REV
NC		NA			1.8.3.14		H2.04.63			1

DSN	M. CORNELIUS	05/15/01
DRW	R. WATSON	05/15/01
CHK	B. JOHNSON	05/15/01
DEPT		
PE	C.L. GARREN	9/6/01
PJ	J. STELLERN	08/21/01
REQ		
UTB	J.R. LAWSON	09/25/01

RPE
BRUCE W. JOHNSON
REGISTERED ENGINEER
No. 021078
STATE OF TENNESSEE
1 12/20/01
REV. DATE
DRAWING APPROVALS

REV	CHANGE TYPE	CHANGE CONTROL SYSTEM	CHANGE REQUEST NUMBER	DESCRIPTION	DSN	CHK	DEPT	DATE	PE	DATE	PJ	DATE	REQ	DATE	UTB	DATE	RPE	RPE NO	DATE
1				CERTIFIED FOR CONSTRUCTION – 12/20/01	RTW	KJH		12/20/01				12/20/01		12/20/01	BWJ			105869	12/20/01
0				CERTIFIED FOR CONSTRUCTION – MAY 15, 2001	RTW	KJH		9/6/01	CLG	9/6/01	JDS	8/21/01		9/25/01	JRL	9/25/01	BWJ	105869	5/15/01

REVISION OR ISSUE PURPOSE — REVISION APPROVALS

	DSN	CHK	DEPT	PE	PJ	REQ	UTB	RPE	RPE NO	DATE
RW	AW	BWJ	PD	BWJ	BWJ	--	BWJ	--	ED	
SC	AW	WRS	RL	WRS	BWJ	--	WRS	--	WAS	
ST	CV	EC	EE	EM	IE	M	PD	SE	AR	

SQUAD CHECK

NO REPRESENTATION OR WARRANTY, EXPRESSED OR IMPLIED, IS MADE AS TO THE ACCURACY, COMPLETENESS OR USEFULNESS OF THE INFORMATION OR STATEMENTS CONTAINED IN THESE DRAWINGS, OR THAT THE USE OR DISCLOSURE OF ANY INFORMATION, APPARATUS, METHOD, OR PROCESS DISCLOSED IN THESE DRAWINGS MAY NOT INFRINGE PRIVATE RIGHTS OF OTHERS. NO LIABILITY IS ASSUMED WITH RESPECT TO THE USE OF, OR FOR DAMAGES RESULTING FROM THE USE OF ANY INFORMATION, APPARATUS, METHOD, OR PROCESS DISCLOSED IN THESE DRAWINGS. DRAWINGS MADE AVAILABLE FOR INFORMATION TO BIDDER ARE NOT TO BE USED FOR OTHER PURPOSES AND ARE TO BE RETURNED UPON REQUEST OF THE FORWARDING CONTRACTOR.

NUMBER OF SECTION OR DETAIL
DRAWING ON WHICH SECTION OR DETAIL IS SHOWN OR TAKEN
SECTION AND DETAIL KEY

THIS DOCUMENT CONTROLLED BY
CHANGE CONTROL SYSTEM 4
ENGINEERING PROCEDURE SNS-ENG-0001

Date: 12/13/2001 Time: 18:01:07
Drawing: H2.04.63
C:\Project_Files\PROJECTS\1000\108_CAD\CIVIL\H8E_JBS\H2_PLOT\U-D4-H2.DWG

AutoCAD