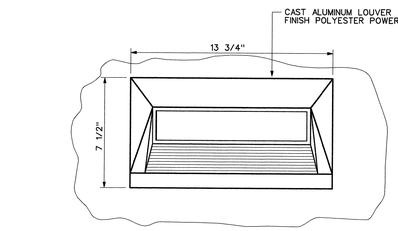

FRONT VIEW

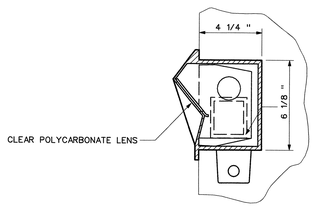

SIDE VIEW

4 ULT6.35.01 TYPE "G" RECESSED WALL LIGHT FIXTURE DETAIL

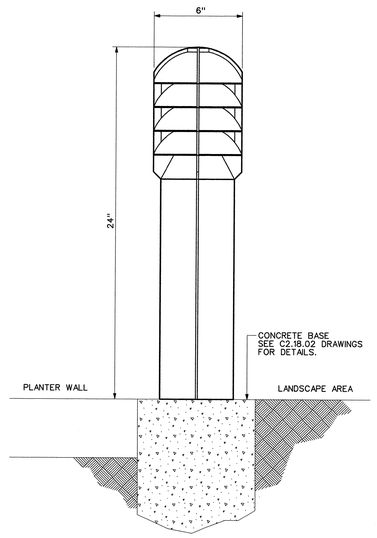

3 ULT6.35.01 TYPE "H" PEDESTAL LIGHT FIXTURE DETAIL

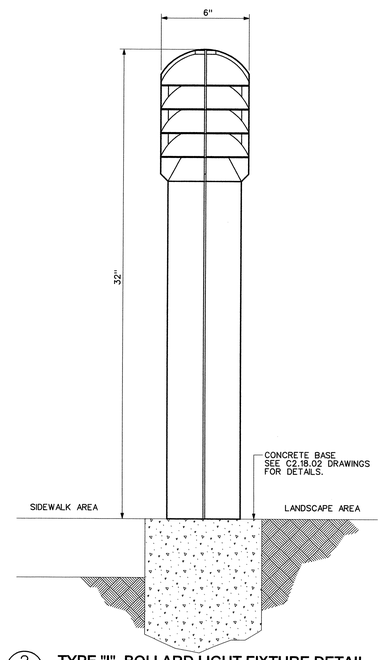

2 ULT6.35.01 TYPE "I" BOLLARD LIGHT FIXTURE DETAIL

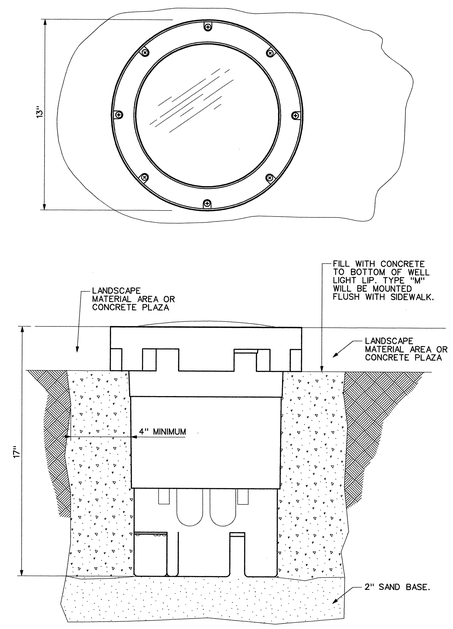

1 ULT6.35.01 TYPE "J", "K" & "M" WELL MOUNTED LIGHT FIXTURE DETAIL

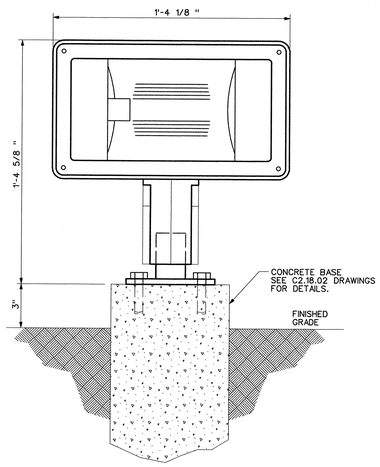

FRONT VIEW

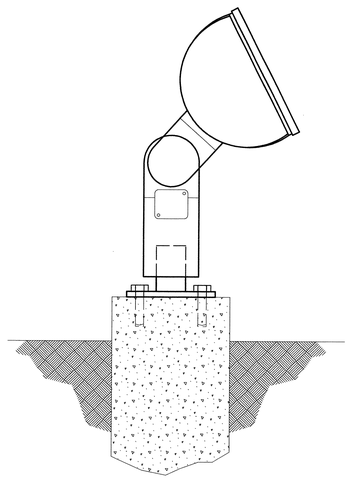

SIDE VIEW

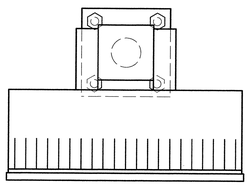

TOP VIEW

5 ULT6.35.01 TYPE "L" BASE PAD MOUNTED FLOOD LIGHT DETAIL

SCALE: 3" = 1'-0"

108031400-U8E-8600-A009

Knight/Jacobs
Knight/Jacobs Joint Venture
701 Scarboro Road, MS 8253
Oak Ridge, TN 37830
865-241-9433
fax 865-241-3400

BWSC
BARGE WAGGONER SUMNER & CANNON, INC.
ENGINEERS ARCHITECTS PLANNERS
LANDSCAPE ARCHITECTS AND SURVEYORS
300 Cumberland Park Drive Suite 300,Nashville, Davidson 37228
Phone (615) 255-2288 Fax (615) 255-3211

UT-BATTELLE
Oak Ridge National Laboratory
managed for the DEPARTMENT OF ENERGY under
U.S. GOVERNMENT contract DE-AC05-00OR22725
UT-BATTELLE, LLC. • Oak Ridge, Tennessee

PROJECT NAME:
SPALLATION NEUTRON SOURCE

CENTRAL LAB AND OFFICE BUILDING
LANDSCAPE LIGHTING DETAILS

1	48	49	50	PLANT	BLDG	FL	SH.	OF	TYPE	CLASS
3	U	X	X	8	8600	X	1	1	S	U
51		52		53	WBS	DRAWING NUMBER				REV
NC		NA		IN	1.8.3.14	ULT6.35.01				0

NO REPRESENTATION OR WARRANTY, EXPRESSED OR IMPLIED, IS MADE AS TO THE ACCURACY, COMPLETENESS OR USEFULNESS OF THE INFORMATION OR STATEMENTS CONTAINED IN THESE DRAWINGS, OR THAT THE USE OR DISCLOSURE OF ANY INFORMATION, APPARATUS, METHOD, OR PROCESS DISCLOSED IN THESE DRAWINGS MAY NOT INFRINGE PRIVATE RIGHTS OF OTHERS. NO LIABILITY IS ASSUMED WITH RESPECT TO THE USE OF, OR FOR DAMAGES RESULTING FROM THE USE OF ANY INFORMATION, APPARATUS, METHOD, OR PROCESS DISCLOSED IN THESE DRAWINGS. DRAWINGS MADE AVAILABLE FOR INFORMATION TO BIDDER ARE NOT TO BE USED FOR OTHER PURPOSES AND ARE TO BE RETURNED UPON REQUEST OF THE FORWARDING CONTRACTOR.

NUMBER OF SECTION OR DETAIL
DRAWING ON WHICH SECTION OR DETAIL IS SHOWN OR TAKEN
SECTION AND DETAIL KEY

THIS DOCUMENT CONTROLLED BY
CHANGE CONTROL SYSTEM 4
ENGINEERING PROCEDURE SNS-ENG-G001

REV	CHANGE TYPE	CHANGE CONTROL SYSTEM	CHANGE REQUEST NUMBER	DESCRIPTION	DSN	CHK	DEPT
0				CERTIFIED FOR CONSTRUCTION - 5/15/2001	DHP	RBS	

REVISION OR ISSUE PURPOSE

DATE	PE	DATE	PJ	DATE	REQ	DATE	UTB	DATE	RPE	RPE NO	DATE
	RBS	10/1/01	WS	9/21/01				10/9/01	RBS	17982	5/15/01

REVISION APPROVALS

ST	CV	EC	EE	EM	IE	M	PD	SE	AR
SG	JP	BS	RL	BS	BJ	---	BS	---	WS

SQUAD CHECK

RPE	DSGN D. PINKSTON	5/15/01
	DRW R. BOOKER	5/15/01
	CHKR R. STEPHENS	5/15/01
	SECT	
	DEPT	
	PE	10/1/01
	PJ	9/21/01
	REQ	
	UTB	10/9/01

ROBERT B. STEPHENS REGISTERED ENGINEER NO. 17982 STATE OF TENNESSEE

REV. 0 5-10-01 DATE

DRAWING APPROVALS

MicroStation
D MAY 2001 14:53:54
\sns\700_cadd\task_01\task_01_35\740_plot\ult6_35_01.dgn