8 | 7 | 6 | 5 | 4 | 3 | 2 | NEXT ASS'Y: 1 FINAL ASS'Y:

ASTM A572 GRADE 50

STEEL COLUMN SCHEDULE

Floor levels: ROOF LEVEL EL. VARIES; LEVEL 6 EL. 174'-7"; LEVEL 5 EL. 155'-3"; LEVEL 4 EL. 141'-3"; LEVEL 3 EL. 127'-3"; LEVEL 2 EL. 113'-3"; LEVEL 1 ENTRY LEVEL EL. 99'-3"; LEVEL B1 SERVICE EL. 80'-7"; LEVEL B2 SUB-BASEMENT EL. 61'-11"

COMMENTS: T/FTG. EL. VARIES SEE PLAN (TYP.)

No.	LOCATION	Roof–Level 6	Level 6–Level 5	Level 5–Level 4	Level 4–Level 3	Level 3–Level 2	Level 2–Level 1	Level 1–Level B1	Level B1–Level B2	BASE PLATE DETAIL	COMMENTS
1	A-1 D-1					W14x61	W14x61	W14x74		BP3	
2	A-2 D-2			W14x132	W14x132	W14x132	W14x159	W14x176		BP8	
3	A-3			W14x145	W14x145	W14x145	W14x145	W14x176		BP15	
4	A-4			W14x90	W14x99	W14x99	W14x109	W14x120		BP1	
5	A-5 A-6 A-7 A-7.1 A-8			W14x43	W14x176	W14x176	W14x176	W14x176		BP6	
6	A-9			W14x43	W14x43	W14x53	W14x109	W14x109		BP2	
7	A-10 A-11			W14x43	W14x43	W14x48	W14x120	W14x120		BP2	
8	A-12			W14x43	W14x43	W14x48	W14x120	W14x120	W14x120	BP2	
9	A-13 A-14 A-15			W14x43	W14x43	W14x48	W14x61	W14x90	W14x90	BP1	
10	A-16			W14x43	W14x43	W14x48	W14x61	W14x109	W14x120	BP2	
11	B-1 C-1					W14x74	W14x74	W14x90		BP1	
12	B-2 C-2			W14x68	W14x68			W14x74		BP3	
13	B-3 C-3		TS10x10x5/8	TS10x10x5/8				W14x61		BP7	
14	B-4 C-4		W14x99	W14x120	W14x132	W14x159	W14x176	W14x193		BP8	
15	B-5 B-6		W14x109	W14x109	W14x233	W14x233	W14x233	W14x233		BP14	
16	B-7	W14x82	W14x82	W14x82	W14x90	W14x90	W14x109	W14x109		BP44	
17	B-7.1	W14x74	W14x74	W14x82	W14x90	W14x90	W14x109	W14x132		BP42	
18	B-8	W14x74	W14x74	W14x82	W14x90	W14x90	W14x109	W14x132		BP38	
19	B-9		W14x48	W14x61	W14x61	W14x68	W14x82	W14x99		BP1	
20	B-10		W14x48	W14x61	W14x61	W14x74	W14x82	W14x99		BP1	
21	B-11		W14x48	W14x61	W14x61	W14x74	W14x90	W14x109		BP1	
22	B-12		W14x48	W14x61	W14x61	W14x74	W14x90	W14x99	W14x109	BP1	
23	B-13		W14x82	W14x99	W14x109	W14x120	W14x145	W14x159	W14x159	BP26	
24	B-14		W14x82	W14x99	W14x109	W14x120	W14x145	W14x159	W14x159	BP22	
25	B-15		W14x53	W14x61	W14x68	W14x82	W14x90	W14x99	W14x109	BP4	
26	B-16		W14x68	W14x82	W14x82	W14x90	W14x109	W14x120	W14x132	BP36	
27	B-17 C-17		W14x43	W14x43	W14x53	W14x61	W14x68	W14x90	W14x90	BP1	
28	C-5 C-6		W14x109	W14x109	W14x233	W14x233	W14x233	W14x233		BP12	
29	C-7	W14x82	W14x82	W14x82	W14x90	W14x90	W14x109	W14x109		BP43	
30	C-7.1	W14x74	W14x74	W14x82	W14x132	W14x159	W14x159	W14x159		BP21	
31	C-8	W14x74	W14x74	W14x82	W14x132	W14x159	W14x159	W14x159		BP27	
32	C-9		W14x43	W14x61	W14x61	W14x82	W14x90	W14x109		BP1	
33	C-10		W14x43	W14x61	W14x68	W14x82	W14x90	W14x109		BP1	
34	C-11		W14x43	W14x61	W14x68	W14x82	W14x90	W14x132		BP1	
35	C-12		W14x43	W14x61	W14x68	W14x90	W14x90	W14x109	W14x109	BP4	
36	C-13		W14x82	W14x99	W14x109	W14x132	W14x159	W14x159	W14x159	BP25	
37	C-14		W14x82	W14x99	W14x109	W14x132	W14x159	W14x159	W14x159	BP23	
38	C-15		W14x48	W14x61	W14x68	W14x82	W14x90	W14x99	W14x109	BP4	
39	C-16		W14x68	W14x82	W14x82	W14x90	W14x109	W14x120	W14x132	BP37	
40	C.5-14.7	W14x74	W14x74	W14x68	W14x68	W14x74	W14x74	W14x74		BP3	
41	D-3			W14x176	W14x176	W14x176	W14x176	W14x193		BP15	
42	D-4			W14x90	W14x99	W14x99	W14x109	W14x132		BP1	
43	D-5 D-6					P12 P12	P12	P12		BP10	CANOPY COLS. REVIEW WITH ARCH. DWGS.
44	D-15	W14x74	W14x74	W14x68	W14x68	W14x74	W14x74	W14x90	W14x90	BP2	
45	D-16			W14x43	W14x43	W14x48	W14x61	W14x82	W14x90	BP2	
46	D-16.6			W14x43	W14x43	W14x43	W14x43	W14x61	W14x68	BP3	
47	D.1-21							W14x43		BP51	
48	D.2-3.3	TS10x10x5/8	TS10x10x5/8	TS10x10x5/8	TS10x10x5/8	TS10x10x5/8	TS10x10x5/8			BP55	
49	D.2-4.1	W14x82	W14x82	W14x68	W14x68	W14x74	W14x74	W14x74		BP54	
50	D.4-3.3	TS10x10x5/8	TS10x10x5/8	TS10x10x5/8	TS10x10x5/8	TS10x10x5/8	TS10x10x5/8			BP52	
51	D.4-4.1	W14x82	W14x82	W14x68	W14x68	W14x74	W14x74			BP53	
52	D.9-14.7 D.9-14.9	TS10x10x5/8	TS10x10x5/8	TS10x10x5/8	TS10x10x5/8	TS10x10x5/8	TS10x10x5/8	TS10x10x5/8		BP19	
53	E-21			W14x43	W14x43	W14x43	W14x48	W14x61		BP5	
54	E-22				W14x74	W14x90	W14x109	W14x120		BP1	
55	E-23				W14x43	W14x61	W14x74	W14x90		BP1	
56	E-24				W14x74	W14x82	W14x99	W14x109		BP1	
57	E-25				W14x74	W14x82	W14x99	W14x109		BP33	
58	E-26 E-27				W14x74	W14x82	W14x99	W14x132	W14x132	BP1	
59	E-28				W14x43	W14x61	W14x82	W14x145	W14x145	BP13	
60	E-29				W14x43	W14x61	W14x68	W14x145	W14x145	BP13	
61	E-30				W14x90	W14x99	W14x109	W14x233	W14x233	BP12	
62	E-31			W14x43	W14x43	W14x43	W14x43	W14x90	W14x90	BP9	
63	F-21			W14x43	W14x43	W14x43	W14x53	W14x68		BP3	
64	F-22							W14x74		BP46	
65	F-23 F-24 F-25 F-27							W14x53		BP11	
66	F-26							W14x74		BP49	
67	F-28							W14x90		BP2	
68	F-31			W14x43	W14x43	W14x43	W14x43	W14x90		BP2	
69	G-21			W14x43	W14x43	W14x43	W14x61	W14x68		BP3	
70	G-22			W14x68	W14x74	W14x90	W14x109	W14x120		BP4	
71	G-23			W14x43	W14x43	W14x82	W14x99	W14x132		BP4	
72	G-24			W14x68	W14x43	W14x82	W14x99	W14x132		BP4	
73	G-25			W14x48	W14x68	W14x82	W14x99	W14x132		BP4	
74	G-26			W14x68	W14x74	W14x82	W14x120	W14x145		BP29	
75	G-27			W14x43	W14x48	W14x82	W14x99	W14x132		BP4	
76	G-28			W14x43	W14x43	W14x82	W14x99	W14x145		BP30	
77	G-29			W14x43	W14x43	W14x74	W14x99	W14x145		BP13	
78	G-30			W14x68	W14x90	W14x99	W14x109	W14x145		BP28	
79	G-31 H-31			W14x43	W14x43	W14x43	W14x43	W14x61		BP5	
80	H-21			W14x43	W14x43	W14x43	W14x53	W14x68		BP3	
81	J-21			W14x43	W14x43	W14x43	W14x48	W14x61		BP5	
82	J-22			W14x68	W14x74	W14x90	W14x109	W14x120		BP1	
83	J-23 J-28			W14x43	W14x43	W14x74	W14x90	W14x120		BP4	
84	J-24			W14x68	W14x82	W14x90	W14x99	W14x120		BP4	
85	J-25			W14x68	W14x74	W14x82	W14x99	W14x145		BP32	
86	J-26			W14x68	W14x74	W14x90	W14x120	W14x159		BP24	
87	J-27			W14x68	W14x74	W14x82	W14x99	W14x145		BP31	
88	J-29			W14x43	W14x43	W14x74	W14x90	W14x120		BP1	
89	J-30			W14x68	W14x90	W14x99	W14x109	W14x120		BP34	
90	J-31			W14x43	W14x43	W14x43	W14x43	W14x61		BP7	
91	K-1					W14x43	W14x43	W14x61		BP7	
92	K-2 M-2					W14x74	W14x74	W14x61		BP5	
93	K-3 K-4					W14x68	W14x82	W14x90		BP17	

FOR BASE PLATE SCHEDULE, SEE S5.30.41

STEEL COLUMN SCHEDULE

No.	LOCATION	Roof–Level 6	Level 6–Level 5	Level 5–Level 4	Level 4–Level 3	Level 3–Level 2	Level 2–Level 1	Level 1–Level B1	Level B1–Level B2	BASE PLATE DETAIL
94	K-4.9							W14x53		BP50
95	VOID				W14x43	W14x43	W14x43	W14x61		BP5
96	VOID				W14x43	W14x43	W14x48	W14x74		BP3
97	VOID			W14x61	W14x61	W14x74	W14x74	W14x90		BP2
98	VOID			TS10x10x5/8	TS10x10x5/8	TS10x10x5/8	TS10x10x5/8	TS10x10x5/8		BP20
99	L-1					W14x48	W14x61	W14x74		BP10
100	L-2							W14x61		BP7
101	L-3				W14x48	W14x48	W14x61	W14x74		BP48
102	L-4 M-6				W14x43	W14x43	W14x61	W14x90		BP2
103	L-5				W14x43	W14x53	W14x53	W14x90		BP2
104	L-6				W14x43	W14x48	W14x61	W14x90		BP1
105	L-12 M-12				W14x43	W14x43	W14x61	W14x82		BP3
106	L-13				W14x61	W14x43	W14x43	W14x90		BP2
107	VOID				W14x43	W14x43	W14x43	W14x90		BP2
108	VOID				W14x82	W14x90	W14x99	W14x109		BP41
109	VOID				W14x82	W14x90	W14x99	W14x109		BP16
110	VOID				W14x82	W14x90	W14x99	W14x109		BP39
111	L-4.9 M-4.9				W14x48	W14x48	W14x61	W14x74		BP18
112	VOID			W14x61	W14x61	W14x61	W14x74	W14x74		BP10
113	M-1					W14x48	W14x61	W14x74		BP47
114	M-3				W14x48	W14x90	W14x109	W14x109		BP45
115	M-4				W14x48	W14x90	W14x109	W14x109		BP2
116	M-5 M-13				W14x61	W14x74	W14x74	W14x90		BP9
117	M-7 M-8 M-10 M-11				W14x43	W14x48	W14x61	W14x90		BP2
118	M-9				W14x43	W14x53	W14x61	W14x90		BP2
119	VOID				W14x43	W14x43	W14x43	W14x90		BP9
120	VOID				W14x82	W14x90	W14x99	W14x109		BP40
121	VOID				W14x43	W14x43	W14x43	W14x74		BP3
122	VOID				W14x82	W14x90	W14x99	W14x109		BP35

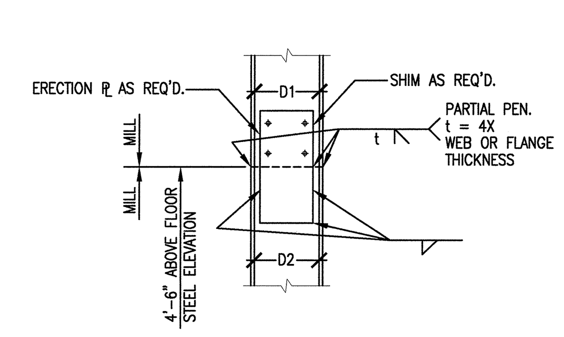

(PARTIAL PEN. WELD THICKNESSES SHOWN ARE EFFECTIVE THICKNESS)

3 S5.30.40 ALTERNATE COLUMN SPLICE
SCALE: 3/4" = 1'-0" SDT051003-2B

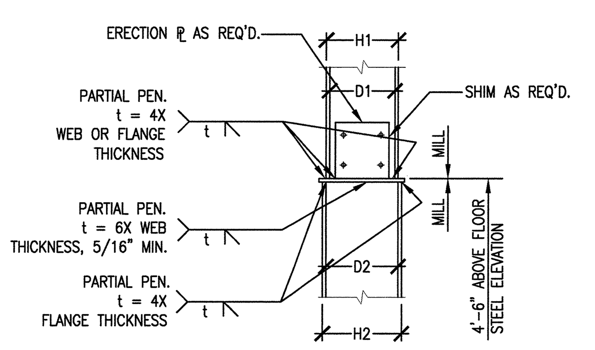

(PARTIAL PEN. WELD THICKNESSES SHOWN ARE EFFECTIVE THICKNESS)

2 S5.30.40 ALTERNATE COLUMN SPLICE
SCALE: 3/4" = 1'-0" SDT051003-2B

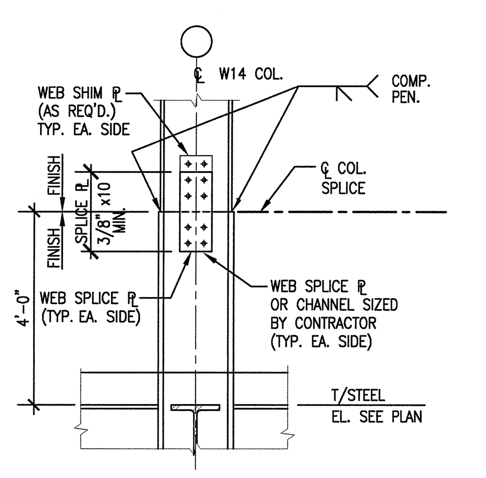

1 S3.10.42 TYPICAL STEEL COLUMN SPLICE
SCALE: 3/4" = 1'-0" SDT051003-2B

1' 6" 0 1' 2'
SCALE: 3/4" = 1'-0"

NO REPRESENTATION OR WARRANTY, EXPRESSED OR IMPLIED, IS MADE AS TO THE ACCURACY, COMPLETENESS OR USEFULNESS OF THE INFORMATION OR STATEMENTS CONTAINED IN THESE DRAWINGS, OR THAT THE USE OR DISCLOSURE OF ANY INFORMATION, APPARATUS, METHOD, OR PROCESS DISCLOSED IN THESE DRAWINGS MAY NOT INFRINGE PRIVATE RIGHTS OF OTHERS. NO LIABILITY IS ASSUMED WITH RESPECT TO THE USE OF, OR FOR DAMAGES RESULTING FROM THE USE OF ANY INFORMATION, APPARATUS, METHOD, OR PROCESS DISCLOSED IN THESE DRAWINGS. DRAWINGS MADE AVAILABLE FOR INFORMATION TO BIDDER ARE NOT TO BE USED FOR OTHER PURPOSES AND ARE TO BE RETURNED UPON REQUEST OF THE FORWARDING CONTRACTOR.

SECTION AND DETAIL KEY: NUMBER OF SECTION OR DETAIL / DRAWING ON WHICH SECTION OR DETAIL IS SHOWN OR TAKEN

THIS DOCUMENT CONTROLLED BY
CHANGE CONTROL SYSTEM 4
ENGINEERING PROCEDURE SNS-ENG-G001

REV	CHANGE TYPE	CHANGE CONTROL SYSTEM	CHANGE REQUEST NUMBER	DESCRIPTION	DSN	CHK	DEPT	DATE	PE	DATE	PJ	DATE	REQ	DATE	UTB	DATE	RPE	RPE NO	DATE
1				CERTIFIED FOR CONSTRUCTION – 12/20/01	RW	JJB			[signature]	12/01	[signature]	12/01			[signature]	12/26/01	JJB	23236	12/20/01
0	–	–	–	CERTIFIED FOR CONSTRUCTION – MAY 15, 2001	WLS	SC			CLG	9/6/01	JS	8/21/01			JRL	9/25/01	JJB	23236	5/15/01

REVISION OR ISSUE PURPOSE | REVISION APPROVALS

ST	CV	EC	EE	EM	IE	M	PD	SE	AR
RW	AW	BWJ	PD	BWJ	BWJ	--	BWJ	--	ED
SC		WRS	RL	WRS	BWJ	--	WRS	--	WAS

SQUAD CHECK

RPE: JOHN BUSCH REGISTERED ENGINEER AGRICULTURE COMMERCE NO. 23236 STATE OF TENNESSEE
REV. 1 DATE 12/20/01

DSN	W. SONNA	5/15/01
DRW	T. DEADY	5/15/01
CHK	R. WALKINGTON	5/15/01
DEPT		
PE	C.L. GARREN	9/6/01
PJ	J. STELLERN	8/21/01
REQ		
UTB	J.R. LAWSON	9/25/01

DRAWING APPROVALS

108031400-S8E-8600-A060

Knight/Jacobs Joint Venture
701 Scarboro Road, MS 8253
Oak Ridge, TN 37830
865-241-9433
fax 865-241-3400

KNIGHT
Knight Advanced Technology
549 West Randolph Street
Chicago, IL 60661

UT-BATTELLE
Oak Ridge National Laboratory
managed for the DEPARTMENT OF ENERGY under U.S. GOVERNMENT contract DE-AC05-00OR22725
UT-BATTELLE, LLC, Oak Ridge, Tennessee

PROJECT NAME:
SPALLATION NEUTRON SOURCE
CENTRAL LAB AND OFFICE BUILDING
STEEL
COLUMN SCHEDULE

1	48	49	50	PLANT	BLDG	FL	SH.	OF	TYPE	CLASS
3	S	X	X	8	8600		1	1	S	U
51	52			53	WBS					REV
NC	NA				1.8.3.14	S5.30.40				1

Date: 12/17/2001 Time: 16:39:06
Username: DEADYTE
CHI-F_VOL2:PROJECTS\7000\700_CADD\TASK_2B\740_PLOT\S5-30-40.DWG

AutoCAD

8 | 7 | 6 | 5 | 4 | 3 | 2 | 1