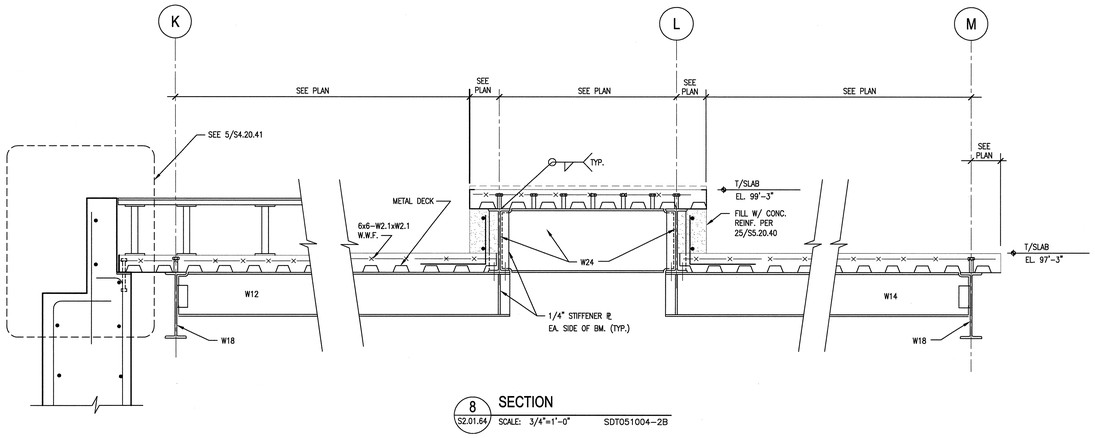

8 / S2.01.64 SECTION
SCALE: 3/4"=1'-0" SDT051004-2B

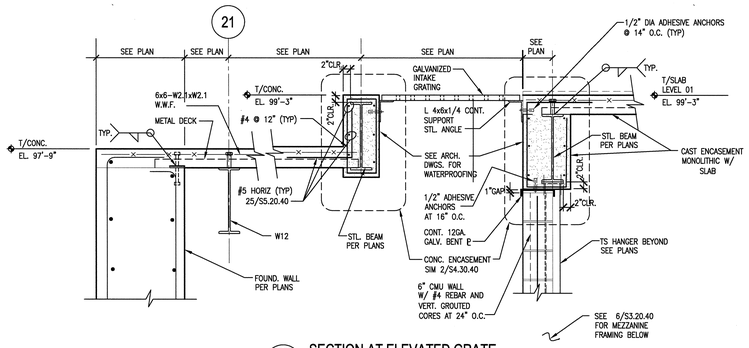

9 / S2.01.61 SECTION AT ELEVATED GRATE
SCALE: 3/4"=1'-0" SDT051004-2B

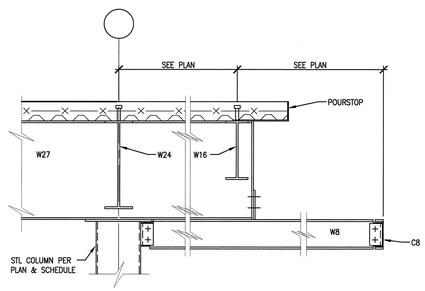

10 / S5.10.40 SECTION @ CANOPY
SCALE: 3/4" = 1'-0" SDT051005-2B

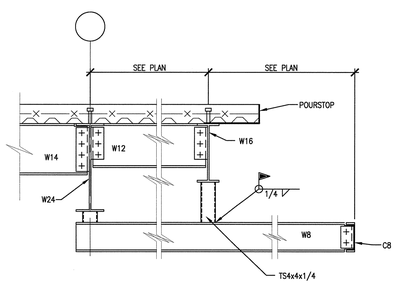

11 / S5.10.40 SECTION @ CANOPY
SCALE: 3/4" = 1'-0" SDT051005-2B

VOID

5 / S2.01.62 DETAIL - CANOPY @ PRECAST WALL
SCALE: 3/4"=1'-0" SDT051004-2B

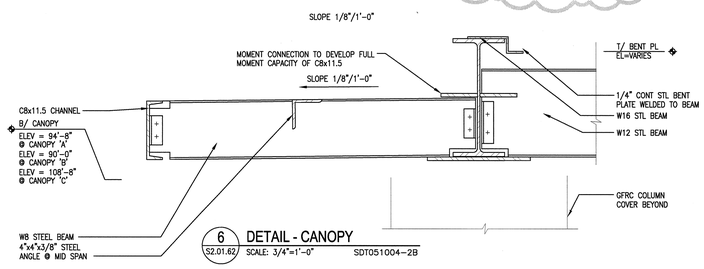

6 / S2.01.62 DETAIL - CANOPY
SCALE: 3/4"=1'-0" SDT051004-2B

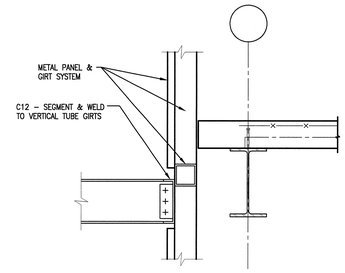

7 / S5.20.41 CANOPY @ EXTERIOR WALL
SCALE: 3/4"=1'-0" SDT051004-2B

ALTERNATE BID #2
VOID
SEE DWG. S4-20-46

1 / S5.10.40 WALKWAY TYPICAL ENLARGED FRAME DETAIL
SCALE: 3/4" = 1'-0" SDT051004-2B

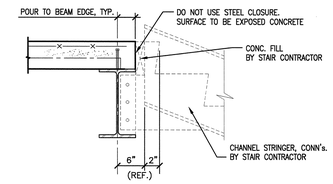

2 / S2.02.61 SECTION SLAB EDGE @ STAIR CONNECTION
SCALE: 3/4" = 1'-0" SDT051004-2B

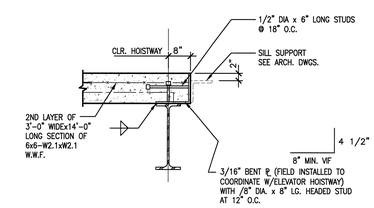

3 / S2.01.61 SECTION ELEVATOR SILL
SCALE: 3/4" = 1'-0" SDT051004-2B

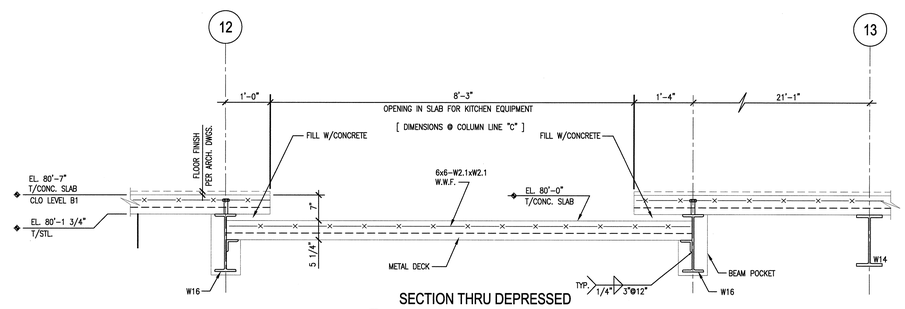

4 / S2.B1.62 SECTION THRU DEPRESSED SLAB AT KITCHEN
SCALE: 3/4"=1'-0" SDT051004-2B

1' 6" 0 1' 2'
SCALE: 3/4" = 1'-0"

NO REPRESENTATION OR WARRANTY, EXPRESSED OR IMPLIED, IS MADE AS TO THE ACCURACY, COMPLETENESS OR USEFULNESS OF THE INFORMATION OR STATEMENTS CONTAINED IN THESE DRAWINGS, OR THAT THE USE OR DISCLOSURE OF ANY INFORMATION, APPARATUS, METHOD, OR PROCESS DISCLOSED IN THESE DRAWINGS MAY NOT INFRINGE PRIVATE RIGHTS OF OTHERS. NO LIABILITY IS ASSUMED WITH RESPECT TO THE USE OF, OR FOR DAMAGES RESULTING FROM THE USE OF ANY INFORMATION, APPARATUS, METHOD, OR PROCESS DISCLOSED IN THESE DRAWINGS. DRAWINGS MADE AVAILABLE FOR INFORMATION TO BIDDER ARE NOT TO BE USED FOR OTHER PURPOSES AND ARE TO BE RETURNED UPON REQUEST OF THE FORWARDING CONTRACTOR.

NUMBER OF SECTION OR DETAIL
DRAWING ON WHICH SECTION OR DETAIL IS SHOWN OR TAKEN
SECTION AND DETAIL KEY

THIS DOCUMENT CONTROLLED BY
CHANGE CONTROL SYSTEM 4
ENGINEERING PROCEDURE SNS-ENG-G001

REV	CHANGE TYPE	CHANGE CONTROL SYSTEM	CHANGE REQUEST NUMBER	DESCRIPTION	DSN	CHK	DEPT
1				CERTIFIED FOR CONSTRUCTION – 12/20/01	RW	JJB	
0				CERTIFIED FOR CONSTRUCTION – MAY 15, 2001	WLS	SC	

REVISION OR ISSUE PURPOSE

DATE	PE	DATE	PJ	DATE	REQ	DATE	UTB	DATE	RPE	RPE NO	DATE
	CLG	9/6/01	JS	8/21/01		JRL	9/25/01		JJB	23236	12/20/01
									JJB	23236	5/15/01

REVISION APPROVALS

ST	CV	EC	EE	EM	IE	M	PD	SE	AR
RW	AW	BWJ	PD	BWJ	BWJ	--	BWJ	--	ED
RW	AW	BWJ	PD	BWJ	BWJ	--	BWJ	--	ED

SQUAD CHECK

RPE
JOHN BUSH REGISTERED ENGINEER AGRICULTURE COMMERCE No. 23236 STATE OF TENNESSEE
REV. DATE 12/20/01

DSN	W. SONNA	5/15/01
DRW	T. DEADY	5/15/01
CHK	R. WALKINGTON	5/15/01
DEPT		
PE	C.L. GARREN	9/6/01
PJ	J. STELLERN	8/21/01
REQ		
UTB	J.R. LAWSON	9/25/01

DRAWING APPROVALS

108031400-S8E-8600-A055

Knight Jacobs
Knight/Jacobs Joint Venture
701 Scarboro Road, MS 8253
Oak Ridge, TN 37830
865-241-9433
fax 865-241-3400

KNIGHT
Knight Advanced Technology
540 West Randolph Street
Chicago, IL 60661

UT-BATTELLE
Oak Ridge National Laboratory
managed for the DEPARTMENT OF ENERGY under
U.S. GOVERNMENT contract DE-AC05-00OR22725
UT-BATTELLE, LLC. = Oak Ridge, Tennessee

PROJECT NAME:
SPALLATION NEUTRON SOURCE
CENTRAL LAB AND OFFICE BUILDING
STEEL
SECTIONS AND DETAILS

1	48	49	50	PLANT	BLDG	FL	SH.	OF	TYPE	CLASS
3	S	X	X	8	8600		1	1	S	U

51	52	53			
NC	NA		WBS 1.8.3.14	S5.20.41	REV 1

AutoCAD
Date: 12/17/2001 Time: 16:26:30
Username: 20060TT
DW-F:_INS2PRO0203\7000\700_C600\600K_2B\140_M\ST\S5-20-41.DWG