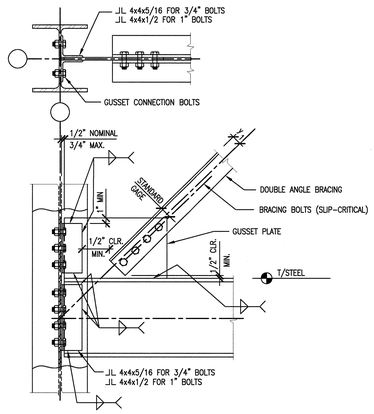

22 S5.20.40 DOUBLE ANGLE BRACING CONNECTION COLUMN WEB SDT051001-2B
SCALE: NONE

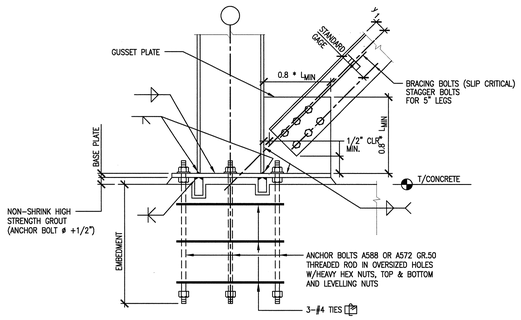

23 S5.20.40 BRACING BASE PLATE CONNECTION TO COLUMN FLANGE
SCALE : NONE SDT051001-2B

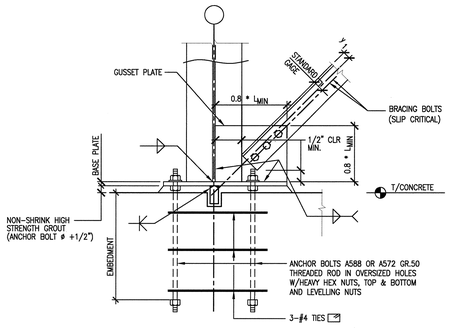

24 S5.20.40 BRACING BASE PLATE CONNECTION TO COLUMN WEB
SCALE : NONE SDT051001-2B

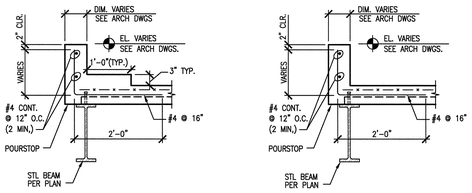

NOTE: SEE ARCH. DWGS FOR LOCATIONS AND DIMENSIONS

25 S5.20.40 MISCELLANEOUS CURB DETAILS
SCALE : NONE SDT053001-2B

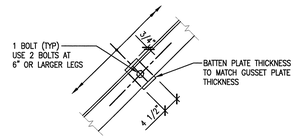

17 S5.20.40 DOUBLE ANGLE BATTEN PLATE SDT051001-2B
SCALE : NONE

NOTE: PROVIDE BATTEN PLATES AT EACH DOUBLE ANGLE BRACE HALFWAY BETWEEN CONNECTIONS.

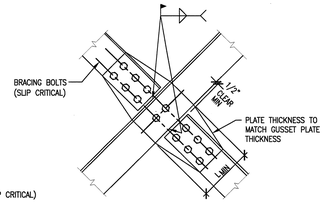

18 S5.20.40 CROSS BRACE CONNECTION
SCALE : NONE SDT051001-2B

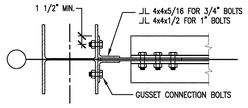

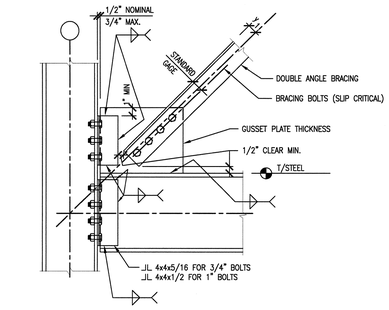

19 S5.20.40 DOUBLE ANGLE BRACING CONNECTION
SCALE: NONE SDT051001-2B

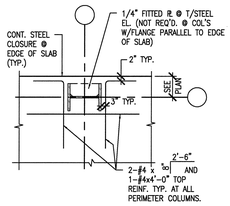

20 S5.20.40 TYPICAL COMPOSITE STEEL DECK SLAB AT PERIMETER COLUMN
SCALE: NONE SDT053001-2B

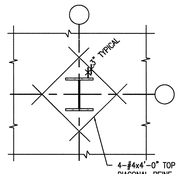

21 S5.20.40 TYPICAL COMPOSITE STEEL DECK SLAB AT COLUMN
SCALE: NONE SDT053001-2B

VOID

12 S5.20.40 PRECAST CONNECTION DETAILS
SCALE: NONE SDT051001-2B

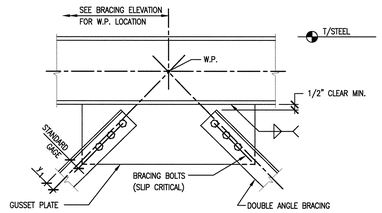

13 S5.20.40 CHEVRON BRACE BRACING CONNECTION
SCALE : NONE SDT051001-2B

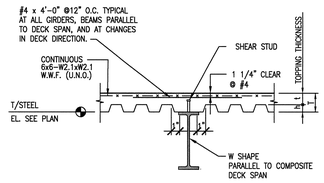

NOTE: SEE TYPICAL COMPOSITE STEEL DECK SLAB DETAIL FOR ADDITIONAL INFORMATION

14 S5.20.40 TYPICAL COMPOSITE STEEL DECK SLAB PARALLEL TO BEAM
SCALE: NONE SDT053001-2B

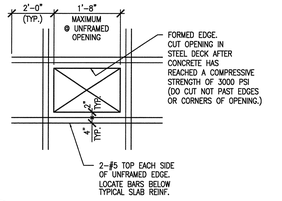

15 S5.20.40 TYPICAL COMPOSITE STEEL DECK SLAB OPENING
SCALE: NONE SDT053001-2B

NOTE: OPENINGS 8"ø OR LESS DO NOT REQUIRE REINFORCEMENT.

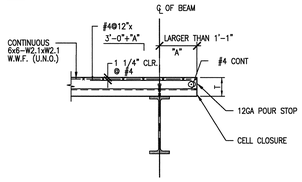

16 S5.20.40 TYPICAL SLAB EDGE AT CANTILEVER
SCALE: NONE SDT053001-2B

VOID

9 S5.20.40 PRECAST CONNECTION DETAILS
SCALE: NONE SDT051001-2B

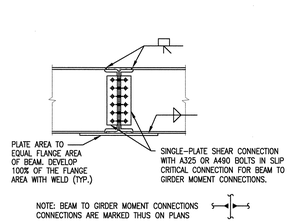

NOTE: BEAM TO GIRDER MOMENT CONNECTIONS CONNECTIONS ARE MARKED THUS ON PLANS

6 S5.20.40 TYPICAL BEAM MOMENT CONNECTION
SCALE : NONE SDT051001-2B

NOTE: 1. APPLICABLE FOR BEAMS OF EQUAL DEPTH.

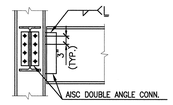

7 S5.20.40 TYPICAL BEAM TO COLUMN CONNECTION
SCALE : NONE SDT051001-2B

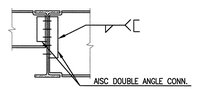

8 S5.20.40 TYPICAL BEAM TO BEAM CONNECTION
SCALE : NONE SDT051001-2B

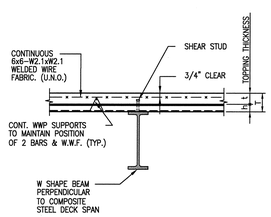

10 S5.20.40 TYPICAL COMPOSITE STEEL DECK SLAB
SCALE: NONE SDT053001-2B

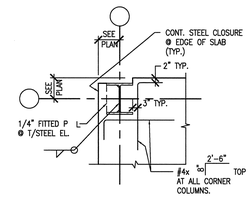

11 S5.20.40 TYPICAL COMPOSITE STEEL DECK SLAB AT CORNER COLUMN
SCALE: NONE SDT053001-2B

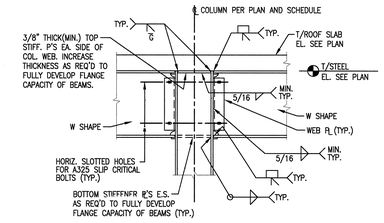

1 S5.20.40 TYPICAL COLUMN MOMENT CONNECTION
SCALE : NONE SDT051001-2B

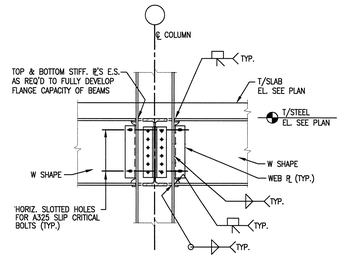

2 S5.20.40 COLUMN STRONG AXIS MOMENT CONNECTION DETAIL
SCALE : NONE SDT051001-2B

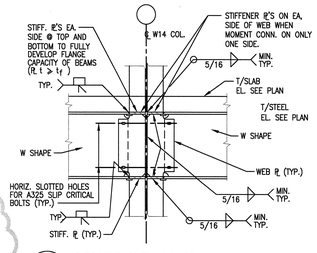

3 S5.20.40 COLUMN WEAK AXIS MOMENT CONNECTION DETAIL
SCALE : NONE SDT051001-2B

NOTE: VERIFY STIFFENER PLATE THICKNESS AND WELDING WITH SIMULTANEOUS LOADS FROM STRONG AXIS MOMENT CONNECTION REQ'MTS.

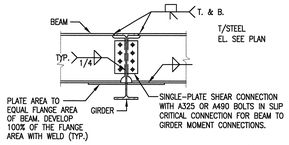

NOTE: BEAM TO GIRDER MOMENT CONNECTIONS CONNECTIONS ARE MARKED THUS ON PLANS

4 S5.20.40 TYPICAL BEAM / GIRDER MOMENT CONNECTION
SCALE : NONE SDT051001-2B

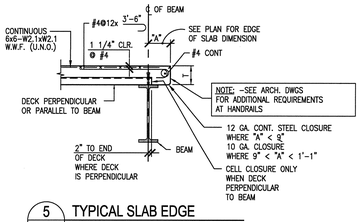

5 S2.05.61 TYPICAL SLAB EDGE
SCALE: NONE SDT053001-2B

108031400-S8E-8600-A054

Knight Jacobs
Knight/Jacobs Joint Venture
701 Scarboro Road, MS 8253
Oak Ridge, TN 37830
865-241-9433
fax 865-241-3400

KNIGHT
Knight Advanced Technology
540 West Randolph Street
Chicago, IL 60661

UT-BATTELLE
Oak Ridge National Laboratory
managed for the DEPARTMENT OF ENERGY under U.S. GOVERNMENT contract DE-AC05-00OR22725
UT-BATTELLE, LLC. © Oak Ridge, Tennessee

PROJECT NAME:
SPALLATION NEUTRON SOURCE
CENTRAL LAB AND OFFICE BUILDING
STEEL
SECTIONS AND DETAILS

DSN	W. SONNA	5/15/01
DRW	T. DEADY	5/15/01
CHK	R. WALKINGTON	5/15/01
DEPT		
PE	C.L. GARREN	9/6/01
PJ	J. STELLERN	8/21/01
REQ		
UTB	J.R. LAWSON	9/25/01

RPE: JOHN BUSCH, REGISTERED ENGINEER, STATE OF TENNESSEE, AGRICULTURE, COMMERCE, NO. 22326
REV. 1 DATE 12/20/01
DRAWING APPROVALS

1	48	49	50	PLANT	BLDG	FL	SH.	OF	TYPE	CLASS
3	S	X	X	8	8600		1	1	S	U

51	52	53	WBS	REV
NC	NA		1.8.3.14	1

S5.20.40

REV	CHANGE TYPE	CHANGE CONTROL SYSTEM	CHANGE REQUEST NUMBER	DESCRIPTION	DSN	CHK	DEPT	DATE	PE	DATE	PJ	DATE	REQ	DATE	UTB	DATE	RPE	RPE NO	DATE	ST	CV	EC	EE	EM	IE	M	PD	SE	AR
1				CERTIFIED FOR CONSTRUCTION - 12/20/01	RW	JJB			#ED	12/01	JJB	12/01			Chad	12/26/01	JJB	23236	12/20/01	RW	AW	BWJ	PD	BWJ	BWJ	–	BWJ	–	ED
0				CERTIFIED FOR CONSTRUCTION - MAY 15, 2001	WLS	SC			CLG	9/6/01	JJB	8/21/01			JRL	9/25/01	JJB	23236	5/15/01	SC		WRS	RL	WRS	BWJ	–	WRS	–	WAS

REVISION OR ISSUE PURPOSE — REVISION APPROVALS — SQUAD CHECK

NO REPRESENTATION OR WARRANTY, EXPRESSED OR IMPLIED, IS MADE AS TO THE ACCURACY, COMPLETENESS OR USEFULNESS OF THE INFORMATION OR STATEMENTS CONTAINED IN THESE DRAWINGS, OR THAT THE USE OR DISCLOSURE OF ANY INFORMATION, APPARATUS, METHOD, OR PROCESS DISCLOSED IN THESE DRAWINGS MAY NOT INFRINGE PRIVATE RIGHTS OF OTHERS. NO LIABILITY IS ASSUMED WITH RESPECT TO THE USE OF, OR FOR DAMAGES RESULTING FROM THE USE OF ANY INFORMATION, APPARATUS, METHOD, OR PROCESS DISCLOSED IN THESE DRAWINGS. DRAWINGS MADE AVAILABLE FOR INFORMATION TO BIDDER ARE NOT TO BE USED FOR OTHER PURPOSES AND ARE TO BE RETURNED UPON REQUEST OF THE FORWARDING CONTRACTOR.

NUMBER OF SECTION OR DETAIL
DRAWING ON WHICH SECTION OR DETAIL IS SHOWN OR TAKEN
SECTION AND DETAIL KEY

THIS DOCUMENT CONTROLLED BY
CHANGE CONTROL SYSTEM 4
ENGINEERING PROCEDURE SNS-ENG-G001

Date: 12/17/2001 Time: 16:30:57
Username: GRAFFE
J:_V02\PROJECTS\1000\100_CADD\NSR_SB\141_PLOT\S5-20-40.DWG