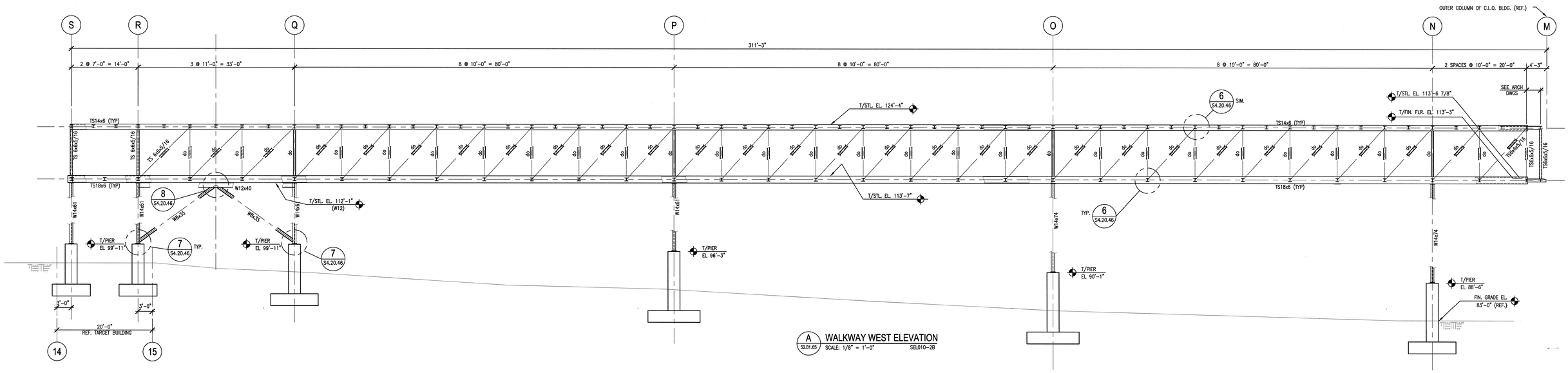

A S2.B1.65 WALKWAY WEST ELEVATION
SCALE: 1/8" = 1'-0" SEL010-2B

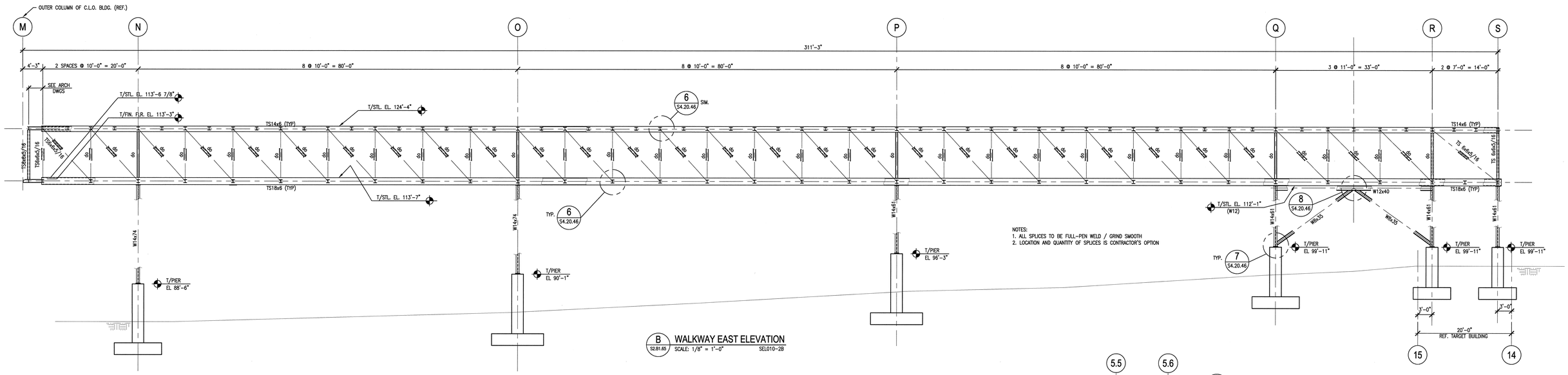

NOTES:
1. ALL SPLICES TO BE FULL-PEN WELD / GRIND SMOOTH
2. LOCATION AND QUANTITY OF SPLICES IS CONTRACTOR'S OPTION

B S2.B1.65 WALKWAY EAST ELEVATION
SCALE: 1/8" = 1'-0" SEL010-2B

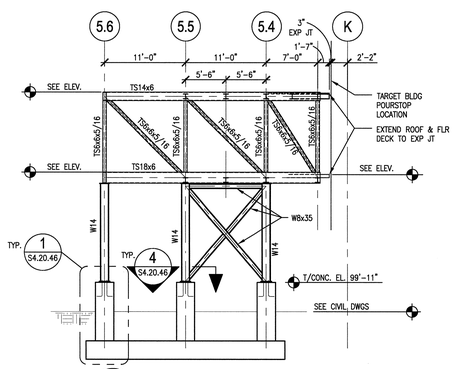

C S2.B1.65 S-LINE LOOKING SOUTH
SCALE: 1/8" = 1'-0" SEL010-2B

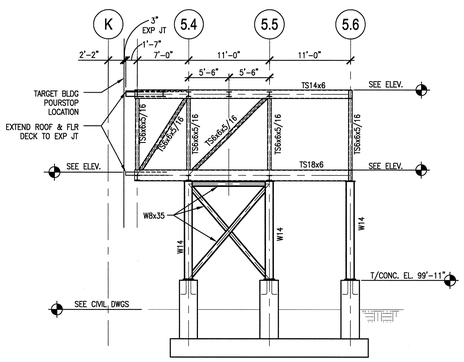

D S2.B1.65 R-LINE LOOKING NORTH
SCALE: 1/8" = 1'-0" SEL010-2B

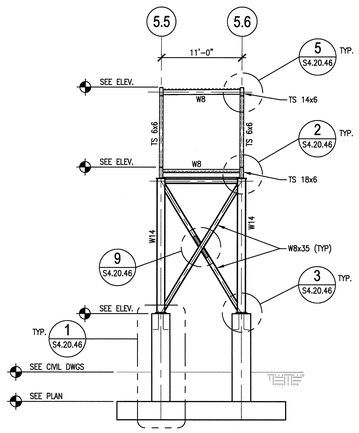

E S2.B1.65 BENT ELEVATIONS LINES N, O, P, Q
SCALE: 1/8" = 1'-0" SEL010-2B

8' 4' 0 8' 16'
SCALE: 1/8" = 1'-0"

108031400-S8E-8600-A059

Knight Jacobs
Knight/Jacobs Joint Venture
701 Scarborough Road, MS 8253
Oak Ridge, TN 37830
865-241-9433
fax 865-241-3400

KNIGHT
Knight Advanced Technology
549 West Randolph Street
Chicago, IL 60661

UT-BATTELLE
Oak Ridge National Laboratory
managed for the DEPARTMENT OF ENERGY under
U.S. GOVERNMENT contract DE-AC05-00OR22725
UT-BATTELLE, LLC. © Oak Ridge, Tennessee

PROJECT NAME:
SPALLATION NEUTRON SOURCE
CENTRAL LAB AND OFFICE BUILDING
PEDESTRIAN BRIDGE FRAMING PLAN - BID ALT #2
SECTOR 65

1	48	49	50	PLANT	BLDG	FL	SH.	OF	TYPE	CLASS
3	S	X	X	8	8600		1	1	S	U

51	52	53	WBS		REV
NC	NA		1.8.3.14	S5.10.40	0

DSN	W. SONNA	12/20/01	
DRW	T. DEADY	12/20/01	
CHK	R. WALKINGTON	12/20/01	
DEPT			
PE		12/20/01	
PJ		12/6/01	
REQ			

RPE: JOHN BUSCH, REGISTERED ENGINEER, AGRICULTURE, COMMERCE, NO. 23236, STATE OF TENNESSEE

REV. 0 DATE 12/20/01 UTB 12/20/01
DRAWING APPROVALS

REV	CHANGE TYPE	CHANGE CONTROL SYSTEM	CHANGE REQUEST NUMBER	DESCRIPTION	DSN	CHK	DEPT
0				CERTIFIED FOR CONSTRUCTION – 12/20/01	RW	JJB	

REVISION OR ISSUE PURPOSE

DATE	PE	DATE	PJ	DATE	REQ	DATE	UTB	DATE	RPE	RPE NO	DATE
	12/20/01		12/6/01				12/20/01	JJB	23236		12/20/01

REVISION APPROVALS

ST	CV	EC	EE	EM	IE	M	PD	SE	AR
RW	AW	BWJ	PD	BWJ	BWJ	--	BWJ	--	ED

SQUAD CHECK

NO REPRESENTATION OR WARRANTY, EXPRESSED OR IMPLIED, IS MADE AS TO THE ACCURACY, COMPLETENESS OR USEFULNESS OF THE INFORMATION OR STATEMENTS CONTAINED IN THESE DRAWINGS, OR THAT THE USE OR DISCLOSURE OF ANY INFORMATION, APPARATUS, METHOD, OR PROCESS DISCLOSED IN THESE DRAWINGS MAY NOT INFRINGE PRIVATE RIGHTS OF OTHERS. NO LIABILITY IS ASSUMED WITH RESPECT TO THE USE OF, OR FOR DAMAGES RESULTING FROM THE USE OF ANY INFORMATION, APPARATUS, METHOD, OR PROCESS DISCLOSED IN THESE DRAWINGS. DRAWINGS MADE AVAILABLE FOR INFORMATION TO BIDDER ARE NOT TO BE USED FOR OTHER PURPOSES AND ARE TO BE RETURNED UPON REQUEST OF THE FORWARDING CONTRACTOR.

NUMBER OF SECTION OR DETAIL
DRAWING ON WHICH SECTION OR DETAIL IS SHOWN OR TAKEN
SECTION AND DETAIL KEY

THIS DOCUMENT CONTROLLED BY
CHANGE CONTROL SYSTEM 4
ENGINEERING PROCEDURE SNS-ENG-G001

Date: 12/17/2001 Time: 16:46:20
Username: ZDAPITE
DW-U:_PEZ2PROJECTS\WBS\8600\S8E_BID\S5.10.40.DWG

AutoCAD