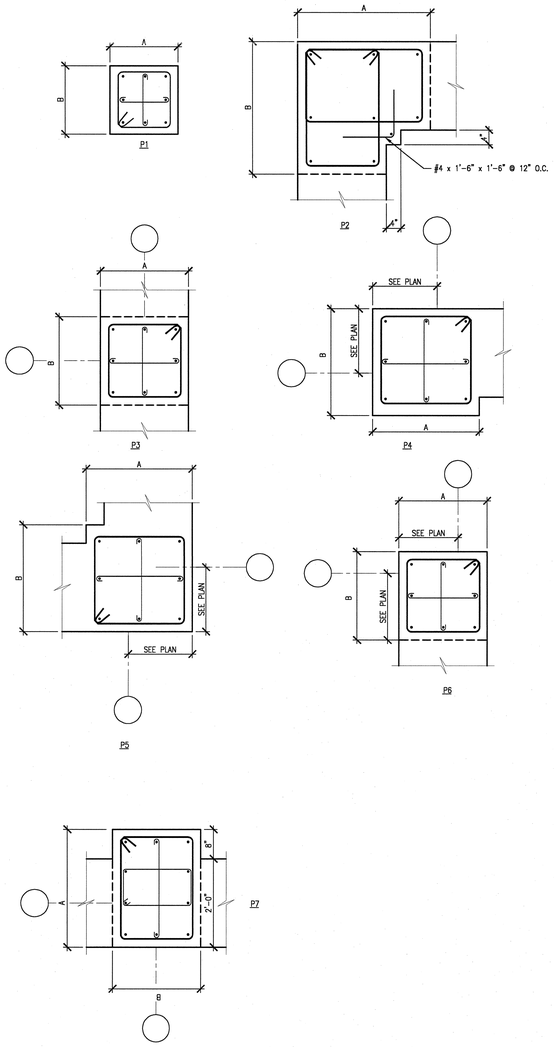

8 / S2.01.61 TYPICAL ARRANGEMENT OF VERT. BARS & TIES IN PIERS
SCALE: NONE SDT032002-2B

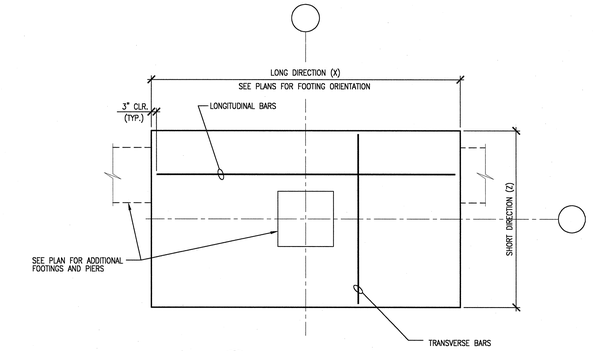

5 / S4.30.40 TYPICAL FOOTING PLAN
SCALE: NONE SDT032002-2B

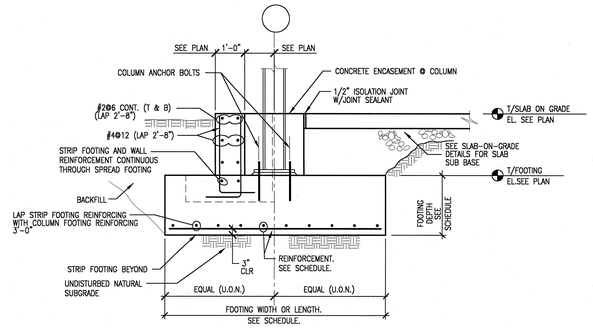

6 / S4.30.40 TYPICAL PERIMETER FOOTING
SCALE: NONE SDT032002-2B

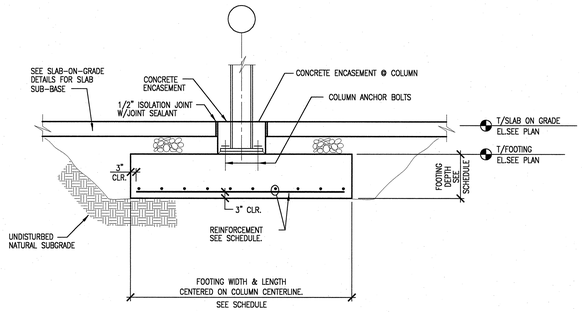

7 / S4.30.40 TYPICAL INTERIOR FOOTING
SCALE: NONE SDT032002-2B

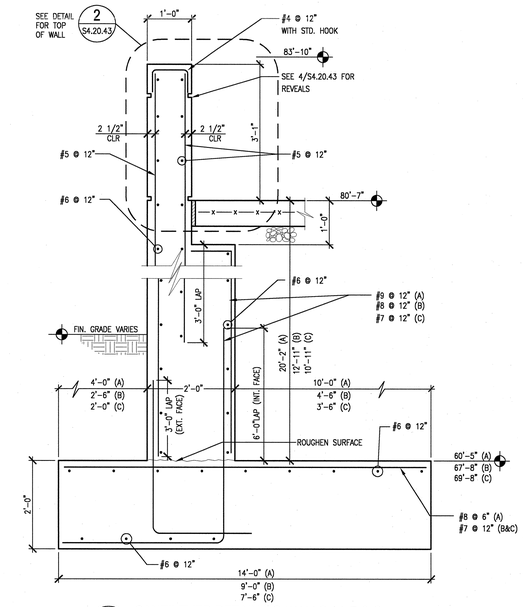

1 / S2.B2.62 CANTILEVER RETAINING WALLS - A,B & C
SCALE: NONE SDT032002-2B

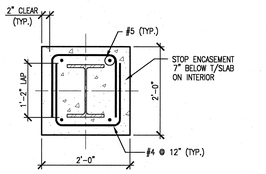

2 / S2.B1.61 TYPICAL COLUMN & BEAM ENCASEMENT DETAIL
SCALE: NONE SDT032002-2B

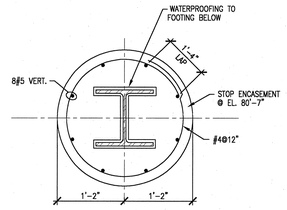

3 / S4.30.40 TYPICAL COLUMN ENCASEMENT DETAIL
SCALE: NONE SDT032002-2B

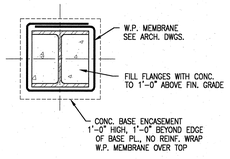

4 / S2.B1.61 TYPICAL COLUMN ENCASEMENT DETAIL
SCALE: NONE SDT032002-2B

PIER SCHEDULE

MARK	A	B	VERTICAL REINFORCEMENT	TIES	REMARKS
P1	2'-0"	2'-0"	8 – #9	#4 @ 12"	
P2	3'-0"	3'-0"	9 – #10	#4 @ 12"	
P3	2'-0"	2'-0"	8 – #9	#4 @ 12"	
P4	2'-5"	2'-5"	8 – #9	#4 @ 12"	
P5	2'-5"	2'-5"	8 – #9	#4 @ 12"	
P6	2'-0"	2'-0"	8 – #9	#4 @ 12"	
P7	2'-8"	2'-0"	8 – #9	#4 @ 12"	

FOOTING SCHEDULE

BRG = 3000 PSF
fy = 60 ksi
f'c = 4 ksi

LABEL	SIZE			BOTTOM REINFORCING		REMARKS
	WIDTH	LENGTH	DEPTH	LONGITNDINAL-X	TRANSVERSE-Z	
F1	6'-0"	6'-0"	1'-3"	7-#7	7-#7	
F2	7'-0"	7'-0"	1'-5"	7-#8	7-#8	
F3	8'-0"	8'-0"	1'-8"	9-#8	9-#8	
F4	9'-0"	9'-0"	1'-11"	9-#9	9-#9	
F5	10'-0"	10'-0"	2'-1"	13-#8	13-#8	
F6	11'-0"	11'-0"	2'-3"	10-#10	10-#10	
F7	12'-0"	12'-0"	2'-5"	12-#10	12-#10	
F8	13'-0"	13'-0"	2'-7"	14-#10	14-#10	
F9	14'-0"	14'-0"	2'-9"	14-#11	14-#11	
F10	15'-0"	15'-0"	2'-11"	19-#10	19-#10	
F11	16'-0"	16'-0"	3'-0"	16-#10	16-#10	
F12	17'-0"	17'-0"	3'-3"	18-#10	18-#10	
F13	18'-0"	18'-0"	3'-6"	19-#10	19-#10	
F14	18'-0"	18'-0"	3'-6"	19-#10	19-#10	#6 @ 12" EA. WAY TOP REINF
F15	19'-0"	19'-0"	3'-6"	18-#10	18-#10	#6 @ 12" EA. WAY TOP REINF
F16	22'-0"	22'-0"	4'-0"	20-#11	20-#11	#6 @ 12" EA. WAY TOP REINF
F17	20'-0"	20'-0"	4'-6"	20-#10	20#10	#8 @ 12" EA. WAY TOP REINF
F18	12'-0"	25'-0"	3'-0"	12-#10	24-#10	#6 @ 12" EA. WAY TOP REINF
F19	12'-0"	22'-0"	3'-6"	15-#10	20-#9	#6 @ 12" EA. WAY TOP REINF
F20	14'-0"	14'-0"	2'-9"	14-#11	14-#11	#6 @ 12" EA. WAY TOP REINF
F21	8'-0"	15'-0"	2'-0"	8-#9 (T & B)	15-#9 (T & B)	2 LAYERS REINF
F22	10'-0"	24'-6"	3'-6"	8#10 T, 13#10 B	20-#10 (T & B)	2 LAYERS REINF
F23	11'-0"	11'-0"	2'-3"	8-#8 T, 10-#10 B	11-#10 (T & B)	2 LAYERS REINF
F24	8'-0"	18'-0"	3'-0"	8-#10	18-#10	
F25	11'-0"	23'-0"	3'-0"	12-#10	23-#10	#6 @ 12" EA. WAY TOP REINF
F26	7'-0"	7'-0"	2'-0"	7-#7	7-#7	
F27	16'-0"	16'-0"	3'-0"	16-#10	16-#10	#6 @ 12" EA. WAY TOP REINF
F28	16'-0"	20'-0"	3'-0"	17-#10	20-#10	
F29	15'-0"	19'-0"	2'-11"	15-#10	20-#10	

SEE TYPICAL FOOTINGS 5, 6 & 7/S4.20.40

NO REPRESENTATION OR WARRANTY, EXPRESSED OR IMPLIED, IS MADE AS TO THE ACCURACY, COMPLETENESS OR USEFULNESS OF THE INFORMATION OR STATEMENTS CONTAINED IN THESE DRAWINGS, OR THAT THE USE OR DISCLOSURE OF ANY INFORMATION, APPARATUS, METHOD, OR PROCESS DISCLOSED IN THESE DRAWINGS MAY NOT INFRINGE PRIVATE RIGHTS OF OTHERS. NO LIABILITY IS ASSUMED WITH RESPECT TO THE USE OF, OR FOR DAMAGES RESULTING FROM THE USE OF ANY INFORMATION, APPARATUS, METHOD, OR PROCESS DISCLOSED IN THESE DRAWINGS. DRAWINGS MADE AVAILABLE FOR INFORMATION TO BIDDER ARE NOT TO BE USED FOR OTHER PURPOSES AND ARE TO BE RETURNED UPON REQUEST OF THE FORWARDING CONTRACTOR.

NUMBER OF SECTION OR DETAIL
DRAWING ON WHICH SECTION OR DETAIL IS SHOWN OR TAKEN
SECTION AND DETAIL KEY

THIS DOCUMENT CONTROLLED BY
CHANGE CONTROL SYSTEM 4
ENGINEERING PROCEDURE SNS-ENG-G001

REV	CHANGE TYPE	CHANGE CONTROL SYSTEM	CHANGE REQUEST NUMBER	DESCRIPTION	DSN	CHK	DEPT	DATE	PE	DATE	PJ	DATE	REQ	DATE	UTB	DATE	RPE	RPE NO	DATE	SC	AW	WRS	RL	WRS	BWJ	--	WRS	--	WAS	ST	CV	EC	EE	EM	IE	M	PD	SE	AR
1				CERTIFIED FOR CONSTRUCTION – MAY 15, 2001	WLS	SC											JJB	23236	5/15/01																			
0				CERTIFIED FOR CONSTRUCTION – OCTOBER 25, 2000	WLS	SC											JJB	23236	10/25/00																			

REVISION OR ISSUE PURPOSE — REVISION APPROVALS — SQUAD CHECK

RPE: JOHN BUSCH, REGISTERED ENGINEER, AGRICULTURE, COMMERCE, NO. 23236, STATE OF TENNESSEE — 5/14/01

DSN	W. SONNA	5/15/01
DRW	T. DEADY	5/15/01
CHK	R. WALKINGTON	5/15/01
DEPT		
PE		
PJ		
REQ		
UTB		

REV. 1 DATE 5/15/01
DRAWING APPROVALS

108031400-S8E-8600-A013

Knight/Jacobs
Knight/Jacobs Joint Venture
701 Scarboro Road, MS 8253
Oak Ridge, TN 37830
865-241-9433
fax 865-241-3400

KNIGHT
Knight Advanced Technology
540 West Randolph Street
Chicago, IL 60661

UT-BATTELLE
Oak Ridge National Laboratory
managed for the DEPARTMENT OF ENERGY under U.S. GOVERNMENT contract DE-AC05-00OR22725
UT-BATTELLE, LLC, @ Oak Ridge, Tennessee

PROJECT NAME:
SPALLATION NEUTRON SOURCE
CENTRAL LAB AND OFFICE BUILDING
CONCRETE
FOOTING & PIER SCHEDULE

1	48	49	50	PLANT	BLDG	FL	SH.	OF	TYPE	CLASS
3	S	X	X	8	8600		1	1	S	U
51		52		53	WBS					REV
NC		NA			1.8.3.14		S4.30.40			1

AutoCAD