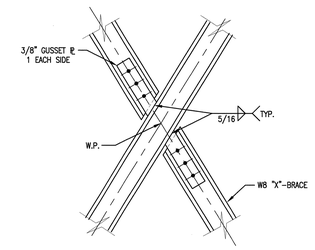

9 S5.10.40 **BRACE CONNECTION DETAIL**
SCALE: 3/4" = 1'-0" SDT051005-2B

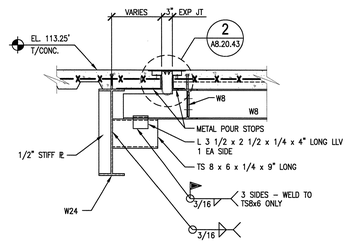

10 S5.10.40 **FLOOR TRANSITION AT CLO BLDG.**
SCALE: 3/4" = 1'-0" SDT051005-2B

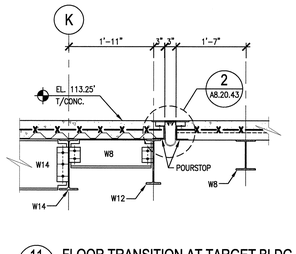

11 S5.10.40 **FLOOR TRANSITION AT TARGET BLDG.**
SCALE: 3/4" = 1'-0" SDT051005-2B

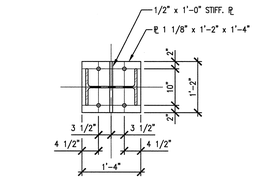

4 S5.10.40 **TYPICAL COLUMN BASE**
SCALE: 3/4" = 1'-0" SDT051005-2B

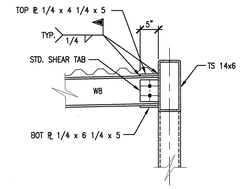

5 S5.10.40 **BRIDGE TOP CONNECTION**
SCALE: 3/4" = 1'-0" SDT051005-2B

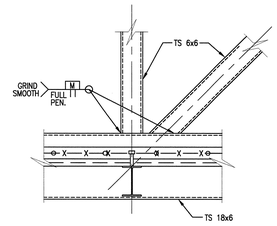

6 S5.10.40 **TYPICAL TRUSS CONNECTION**
SCALE: 3/4" = 1'-0" SDT051005-2B

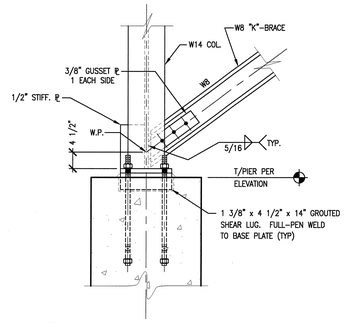

7 S5.10.40 **BRACE CONN. @ PIER DETAIL**
SCALE: 3/4" = 1'-0" SDT051005-2B

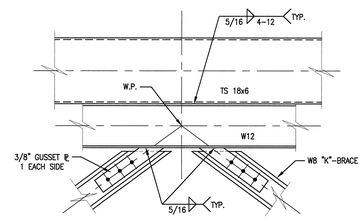

8 S5.10.40 **BRACE CONNECTION DETAIL**
SCALE: 3/4" = 1'-0" SDT051005-2B

FOOTING SCHEDULE						
MARK	SIZE			REINFORCING		REMARKS
	WIDTH	LENGTH	DEPTH	LONGITNDINAL-X	TRANSVERSE-Z	
F1B	10'-0"	21'-0"	2'-6"	10 # 8 T 11 # 10 B	18 # 8 T 24 # 10 B	SEE SECTION 1
F2B	11'-0"	23'-0"	2'-6"	10 # 8 T 11 # 10 B	21 # 8 T 24 # 10 B	SEE SECTION 1
F3B	8'-0"	27'-0"	2'-6"	9 # 8 T 11 # 10 B	27 # 8 T 27 # 10 B	SEE SECTION 1

BAR PLACEMENT (BOTTOM TO TOP)
1. TRANSVERSE BOTTOM
2. LONGITUDINAL BOTTOM
3. LONGITUDINAL TOP
4. TRANSVERSE TOP

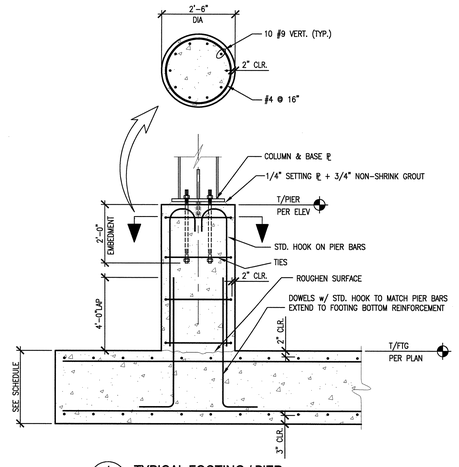

1 S5.10.40 **TYPICAL FOOTING / PIER**
SCALE: 1/2" = 1'-0" SDT051006-2B

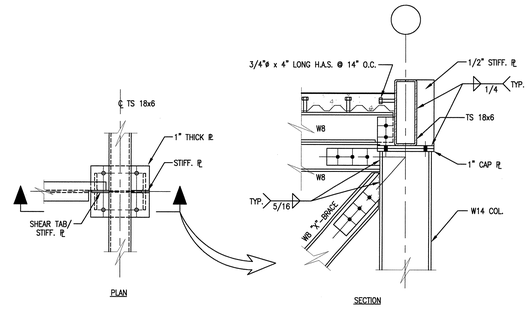

2 S5.10.40 **ELEVATION DETAIL**
SCALE: 3/4" = 1'-0" SDT051005-2B

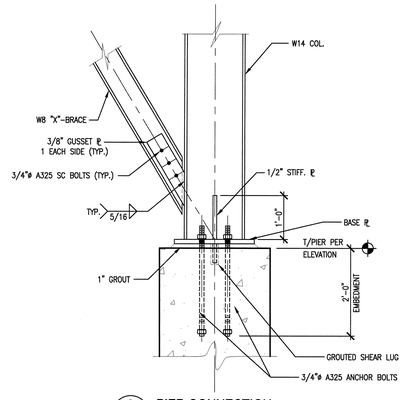

3 S5.10.40 **PIER CONNECTION**
SCALE: 3/4" = 1'-0" SDT051005-2B

2' 1' 0 2' 4'
SCALE: 1/2" = 1'-0"

1' 6" 0 1' 2'
SCALE: 3/4" = 1'-0"

NO REPRESENTATION OR WARRANTY, EXPRESSED OR IMPLIED, IS MADE AS TO THE ACCURACY, COMPLETENESS OR USEFULNESS OF THE INFORMATION OR STATEMENTS CONTAINED IN THESE DRAWINGS, OR THAT THE USE OR DISCLOSURE OF ANY INFORMATION, APPARATUS, METHOD, OR PROCESS DISCLOSED IN THESE DRAWINGS MAY NOT INFRINGE PRIVATE RIGHTS OF OTHERS. NO LIABILITY IS ASSUMED WITH RESPECT TO THE USE OF, OR FOR DAMAGES RESULTING FROM THE USE OF ANY INFORMATION, APPARATUS, METHOD, OR PROCESS DISCLOSED IN THESE DRAWINGS. DRAWINGS MADE AVAILABLE FOR INFORMATION TO BIDDER ARE NOT TO BE USED FOR OTHER PURPOSES AND ARE TO BE RETURNED UPON REQUEST OF THE FORWARDING CONTRACTOR.

NUMBER OF SECTION OR DETAIL
DRAWING ON WHICH SECTION OR DETAIL IS SHOWN OR TAKEN
SECTION AND DETAIL KEY

THIS DOCUMENT CONTROLLED BY
CHANGE CONTROL SYSTEM 4
ENGINEERING PROCEDURE SNS-ENG-G001

REV	CHANGE TYPE	CHANGE CONTROL SYSTEM	CHANGE REQUEST NUMBER	DESCRIPTION	DSN	CHK	DEPT	DATE	PE	DATE	PJ	DATE	REQ	DATE	UTB	DATE	RPE	RPE NO	DATE	ST	CV	EC	EE	EM	IE	M	PD	SE	AR
0	–	–	–	CERTIFIED FOR CONSTRUCTION – 12/20/01	RW	JJB		12/20/01		12/20/01		12/20/01				12/20/01	JJB	23236	12/20/01	RW	AW	BWJ	PD	BWJ	BWJ	--	BWJ	--	ED

REVISION OR ISSUE PURPOSE — REVISION APPROVALS — SQUAD CHECK

RPE
JOHN BUSCH REGISTERED ENGINEER U.S. DEPT. OF AGRICULTURE NO. 23236 STATE OF TENNESSEE
REV. 0 DATE 12/20/01

DSN	W. SONNA	12/20/01
DRW	T. DEADY	12/20/01
CHK	R. WALKINGTON	12/20/01
DEPT		
PE		12/20/01
PJ		12/20/01
REQ		
UTB		12/26/01

DRAWING APPROVALS

108031400-S8E-8600-A053

Knight Jacobs Joint Venture
701 Scarboro Road, MS 8253
Oak Ridge, TN 37830
865-241-9433
fax 865-241-3400

KNIGHT
Knight Advanced Technology
549 West Randolph Street
Chicago, IL 60661

UT-BATTELLE
Oak Ridge National Laboratory
managed for the DEPARTMENT OF ENERGY under
U.S. GOVERNMENT contract DE-AC05-00OR22725
UT-BATTELLE, LLC, © Oak Ridge, Tennessee

PROJECT NAME:
SPALLATION NEUTRON SOURCE
CENTRAL LAB AND OFFICE BUILDING
PEDESTRIAN BRIDGE
SECTIONS AND DETAILS

1	48	49	50	PLANT	BLDG	FL	SH.	OF	TYPE	CLASS
3	S	X	X	8	8600		1	1	S	U

51	52	53	WBS		REV
NC	NA		1.8.3.14	S4.20.46	0

Date: 12/27/2001 Time: 16:40:02
CAD File: S4.20.46
CM-IT_NS_PROJECTS_7000_700_0400_WBS_8S_R1_R1_S_S4-20-46.DWG