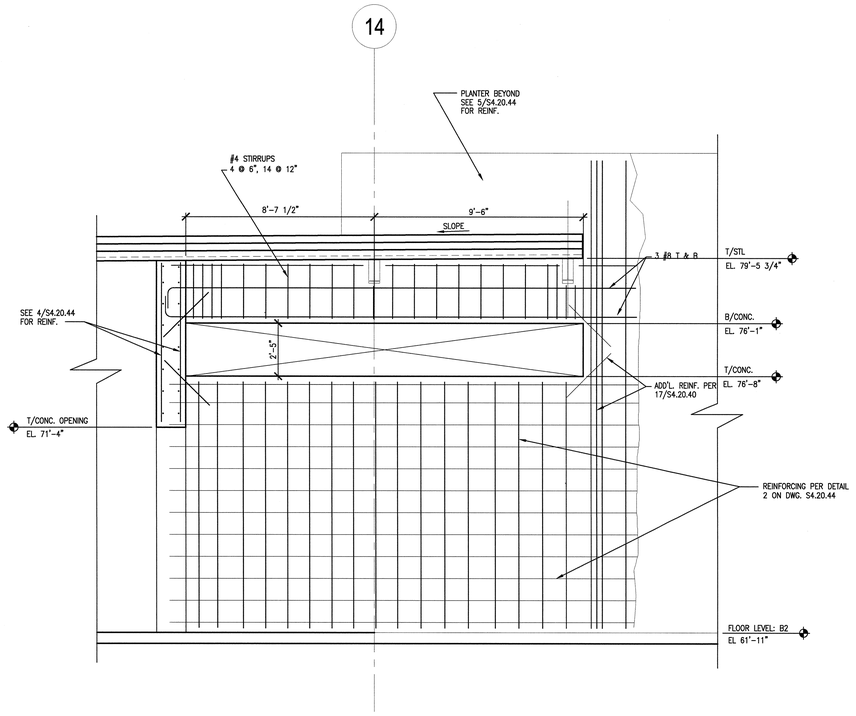

1 S2.B2.62 CONC. OPNG. FOR LOUVER
SCALE: 3/8" = 1'-0" SDT032006-2B

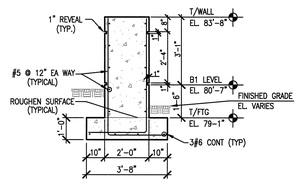

2 S2.B1.64 SECTION
SCALE : 3/8"=1'-0" SDT032006-2B

3' 2' 1' 0 3' 6'
SCALE: 3/8" = 1'-0"

108031400-S8E-8600-A052

Knight/Jacobs Joint Venture
701 Scarboro Road, MS 8253
Oak Ridge, TN 37830
865-241-9433
fax 865-241-3400

KNIGHT
Knight Advanced Technology
540 West Randolph Street
Chicago, IL 60661

Oak Ridge National Laboratory
managed for the DEPARTMENT OF ENERGY under
U.S. GOVERNMENT contract DE-AC05-000R22725
UT-BATTELLE, LLC. • Oak Ridge, Tennessee

PROJECT NAME:
SPALLATION NEUTRON SOURCE
CENTRAL LAB AND OFFICE BUILDING
CONCRETE
SECTIONS AND DETAILS

1	48	49	50	PLANT	BLDG	FL	SH.	OF	TYPE	CLASS
3	S	X	X	8	8600		1	1	S	U
51	52	53			WBS					REV
NC	NA				1.8.3.14		S4.20.45			1

RPE			
DSN	W. SONNA	5/15/01	
DRW	T. DEADY	5/15/01	
CHK	R. WALKINGTON	5/15/01	
DEPT			
PE	C.L. GARREN	9/6/01	
PJ	J. STELLERN	8/21/01	
REQ			
UTB	J.R. LAWSON	9/25/01	

REV. 1 DATE 12/20/01
DRAWING APPROVALS

REV	CHANGE TYPE	CHANGE CONTROL SYSTEM	CHANGE REQUEST NUMBER	DESCRIPTION	DSN	CHK	DEPT
1				CERTIFIED FOR CONSTRUCTION – 12/20/01	RW	JJB	
0	–	–	–	CERTIFIED FOR CONSTRUCTION – MAY 15, 2001	WLS	SC	

REVISION OR ISSUE PURPOSE

DATE	PE	DATE	PJ	DATE	REQ	DATE	UTB	DATE	RPE	RPE NO	DATE
	CLG	9/6/01	JS	8/21/01			JRL	9/25/01	JJB	23236	5/15/01
				12/20/01	JJB	23236			JJB	23236	12/20/01

REVISION APPROVALS

ST	CV	EC	EE	EM	IE	M	PD	SE	AR
RW	AW	BWJ	PD	BWJ	BWJ	--	BWJ	--	ED
SC		WRS	RL	WRS	BWJ	--	WRS	--	WAS

SQUAD CHECK

NO REPRESENTATION OR WARRANTY, EXPRESSED OR IMPLIED, IS MADE AS TO THE ACCURACY, COMPLETENESS OR USEFULNESS OF THE INFORMATION OR STATEMENTS CONTAINED IN THESE DRAWINGS, OR THAT THE USE OR DISCLOSURE OF ANY INFORMATION, APPARATUS, METHOD, OR PROCESS DISCLOSED IN THESE DRAWINGS MAY NOT INFRINGE PRIVATE RIGHTS OF OTHERS. NO LIABILITY IS ASSUMED WITH RESPECT TO THE USE OF, OR FOR DAMAGES RESULTING FROM THE USE OF ANY INFORMATION, APPARATUS, METHOD, OR PROCESS DISCLOSED IN THESE DRAWINGS. DRAWINGS MADE AVAILABLE FOR INFORMATION TO BIDDER ARE NOT TO BE USED FOR OTHER PURPOSES AND ARE TO BE RETURNED UPON REQUEST OF THE FORWARDING CONTRACTOR.

NUMBER OF SECTION OR DETAIL
DRAWING ON WHICH SECTION OR DETAIL IS SHOWN OR TAKEN
SECTION AND DETAIL KEY

THIS DOCUMENT CONTROLLED BY
CHANGE CONTROL SYSTEM 4
ENGINEERING PROCEDURE SNS-ENG-0001

Date: 12/17/2001 Time: 16:41:11
DR-P:/PROJECTS/SNS/DWG/S8E_DWG/S8E_S8/S4_PLOT/S4-20-45.DWG