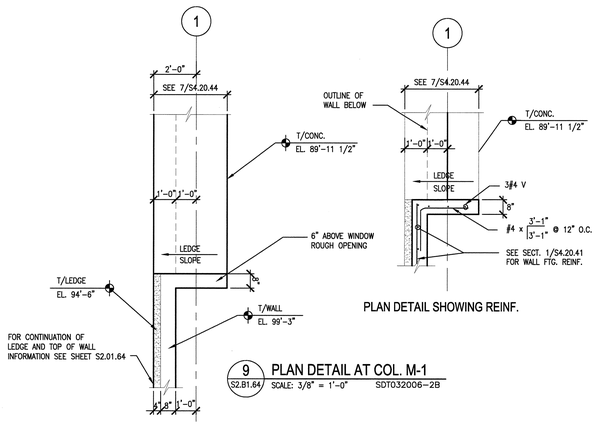

PLAN DETAIL SHOWING REINF.

9 S2.B1.64 PLAN DETAIL AT COL. M-1
SCALE: 3/8" = 1'-0" SDT032006-2B

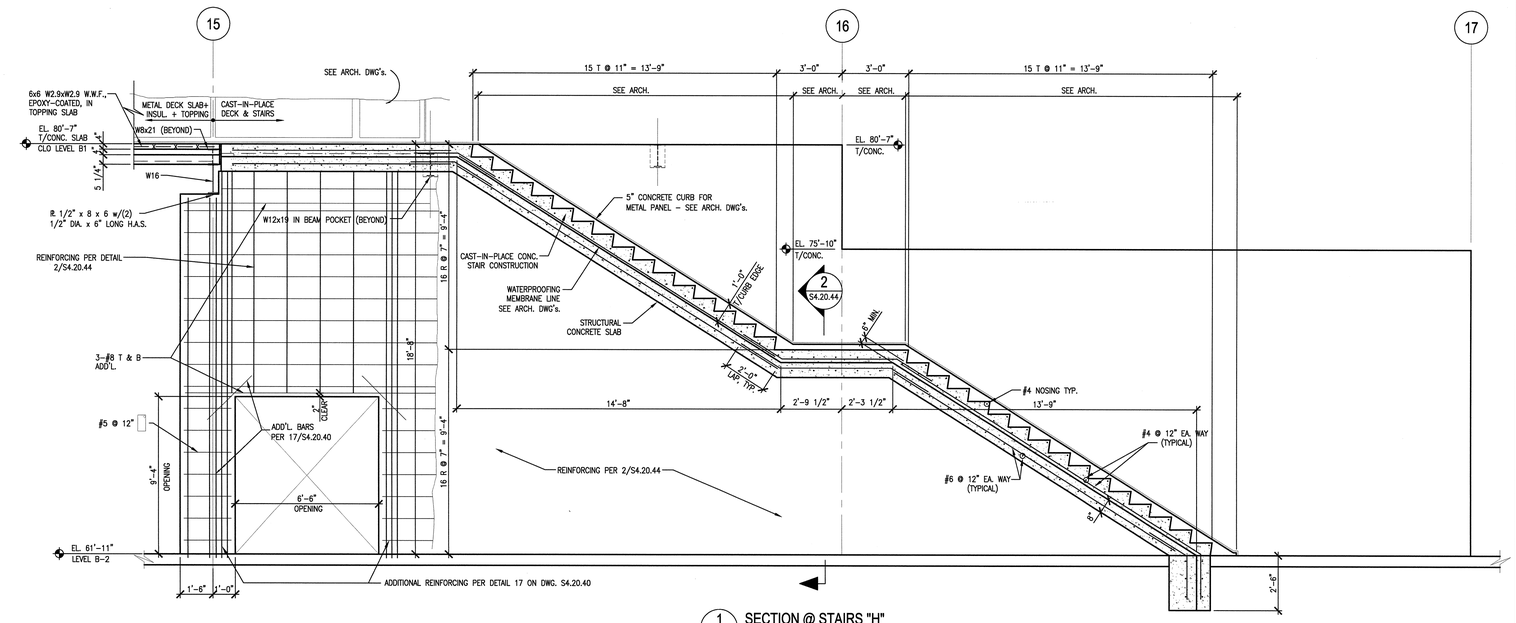

1 S2.B2.62 SECTION @ STAIRS "H"
SCALE: 3/8"=1'-0" SDT032006-2B

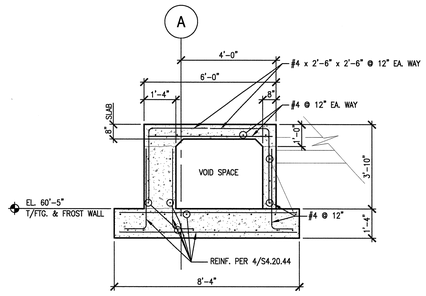

10 S2.B2.62 SECTION @ STAIRS "H"
SCALE: 3/8"=1'-0" SDT032006-2B

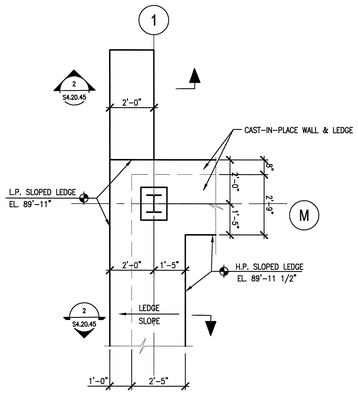

7 S2.B1.64 PLAN DETAIL AT COL. M-1
SCALE: 3/8" = 1'-0" SDT032006-2B

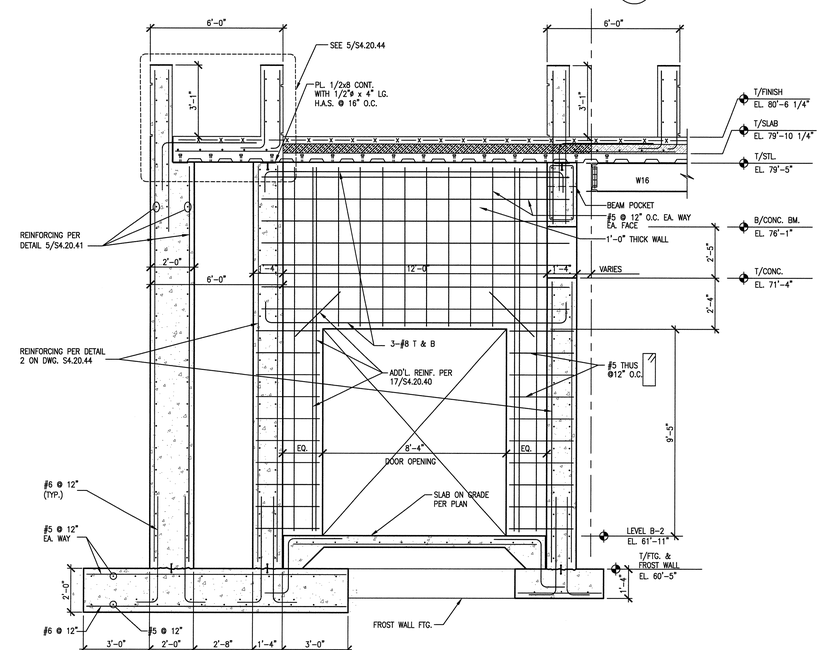

4 S2.B2.62 CONC. OPNG. FOR DOORS
SCALE: 3/8" = 1'-0" SDT032006-2B

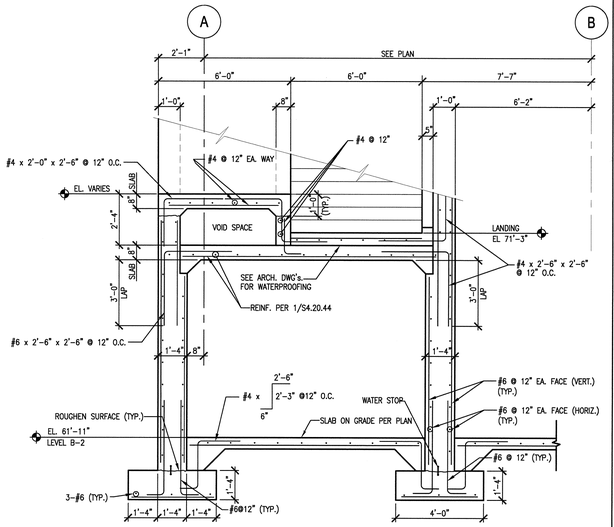

2 S2.B2.62 SECTION THRU STAIRS "H"
SCALE: 3/8"=1'-0" SDT032006-2B

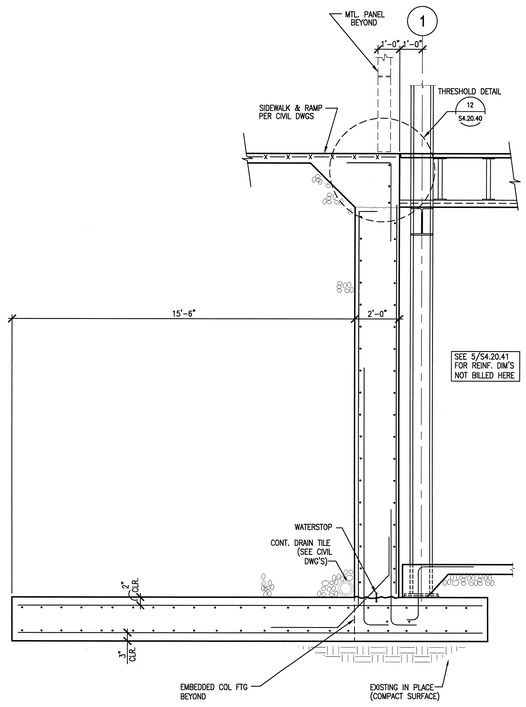

11 S2.B1.64 SECTION
SCALE: 3/8"=1'-0" SDT032006-2B

VOID

8 S2.B1.64 PLAN DETAIL AT COL. K-1
SCALE: 3/8" = 1'-0" SDT032006-2B

VOID

6 S2.B1.63 EXTERIOR WALL SECTION
SCALE: 3/8" = 1'-0" SDT032006-2B

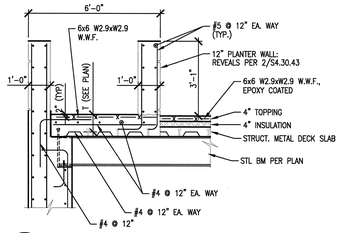

5 S2.B1.62 SECTION THRU PLANTER
SCALE: 3/8"=1'-0" SDT032006-2B

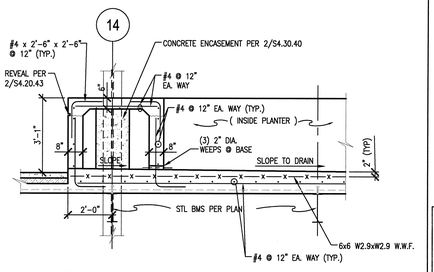

3 S2.B1.62 SECTION THRU PLANTER @ COLUMN
SCALE: 3/8"=1'-0" SDT032006-2B

3' 2' 1' 0 3' 6'
SCALE: 3/8" = 1'-0"

NO REPRESENTATION OR WARRANTY, EXPRESSED OR IMPLIED, IS MADE AS TO THE ACCURACY, COMPLETENESS OR USEFULNESS OF THE INFORMATION OR STATEMENTS CONTAINED IN THESE DRAWINGS, OR THAT THE USE OR DISCLOSURE OF ANY INFORMATION, APPARATUS, METHOD, OR PROCESS DISCLOSED IN THESE DRAWINGS MAY NOT INFRINGE PRIVATE RIGHTS OF OTHERS. NO LIABILITY IS ASSUMED WITH RESPECT TO THE USE OF, OR FOR DAMAGES RESULTING FROM THE USE OF ANY INFORMATION, APPARATUS, METHOD, OR PROCESS DISCLOSED IN THESE DRAWINGS. DRAWINGS MADE AVAILABLE FOR INFORMATION TO BIDDER ARE NOT TO BE USED FOR OTHER PURPOSES AND ARE TO BE RETURNED UPON REQUEST OF THE FORWARDING CONTRACTOR.

NUMBER OF SECTION OR DETAIL — DRAWING ON WHICH SECTION OR DETAIL IS SHOWN OR TAKEN

SECTION AND DETAIL KEY

THIS DOCUMENT CONTROLLED BY

CHANGE CONTROL SYSTEM 4

ENGINEERING PROCEDURE SNS-ENG-G001

REV	CHANGE TYPE	CHANGE CONTROL SYSTEM	CHANGE CONTROL NUMBER	DESCRIPTION	DSN	CHK	DEPT
2				CERTIFIED FOR CONSTRUCTION - 12/20/01	RW	JJB	
1				CERTIFIED FOR CONSTRUCTION - MAY 15, 2001	WLS	SC	
0				CERTIFIED FOR CONSTRUCTION - OCTOBER 25, 2000	WLS	SC	

REVISION OR ISSUE PURPOSE

DATE	PE	DATE	PJ	DATE	REQ	DATE	UTB	DATE	RPE	RPE NO	DATE
	CLG	9/6/01	JS	8/21/01			JRL	9/25/01	JJB	23236	12/20/01
									JJB	23236	5/15/01
									JJB	23236	10/25/00

REVISION APPROVALS

ST	CV	EC	EE	EM	IE	M	PD	SE	AR
RW	AW	BWJ	PD	BWJ	BWJ	--	BWJ	--	ED
SC	AW	WRS	RL	WRS	BWJ	--	WRS	--	WAS
SC		WRS	RL	WRS	BWJ	--	WRS	--	WAS

SQUAD CHECK

RPE

JOHN BUSCH REGISTERED ENGINEER AGRICULTURE COMMERCE No. 23236 STATE OF TENNESSEE

REV. 2 DATE 12/20/01

DSN	W. SONNA	5/15/01
DRW	T. DEADY	5/15/01
CHK	R. WALKINGTON	5/15/01
DEPT		
PE	C.L. GARREN	9/6/01
PJ	J. STELLERN	8/21/01
REQ		
UTB	J.R. LAWSON	9/25/01

DRAWING APPROVALS

108031400-S8E-8600-A012

Knight/Jacobs Joint Venture
701 Scarboro Road, MS 8253
Oak Ridge, TN 37830
865-241-9433
fax 865-241-3400

KNIGHT
Knight Advanced Technology
549 West Randolph Street
Chicago, IL 60661

UT-BATTELLE

Oak Ridge National Laboratory
managed for the DEPARTMENT OF ENERGY under U.S. GOVERNMENT contract DE-AC05-00OR22725
UT-BATTELLE, LLC. • Oak Ridge, Tennessee

PROJECT NAME:
SPALLATION NEUTRON SOURCE
CENTRAL LAB AND OFFICE BUILDING CONCRETE SECTIONS AND DETAILS

1	48	49	50	PLANT	BLDG	FL	SH.	OF	TYPE	CLASS
3	S	X	X	8	8600		1	1	S	U

51	52	53		
NC	NA		WBS 1.8.3.14	S4.20.44	REV 2

AutoCAD

Date: 12/19/2001 Time: 08:10:48
Username: BUSCHJE
C:\ACAD\PROJECTS\8600\S8E_CAD\S8E_CAD\S8E_CAD\S4.20.44.DWG