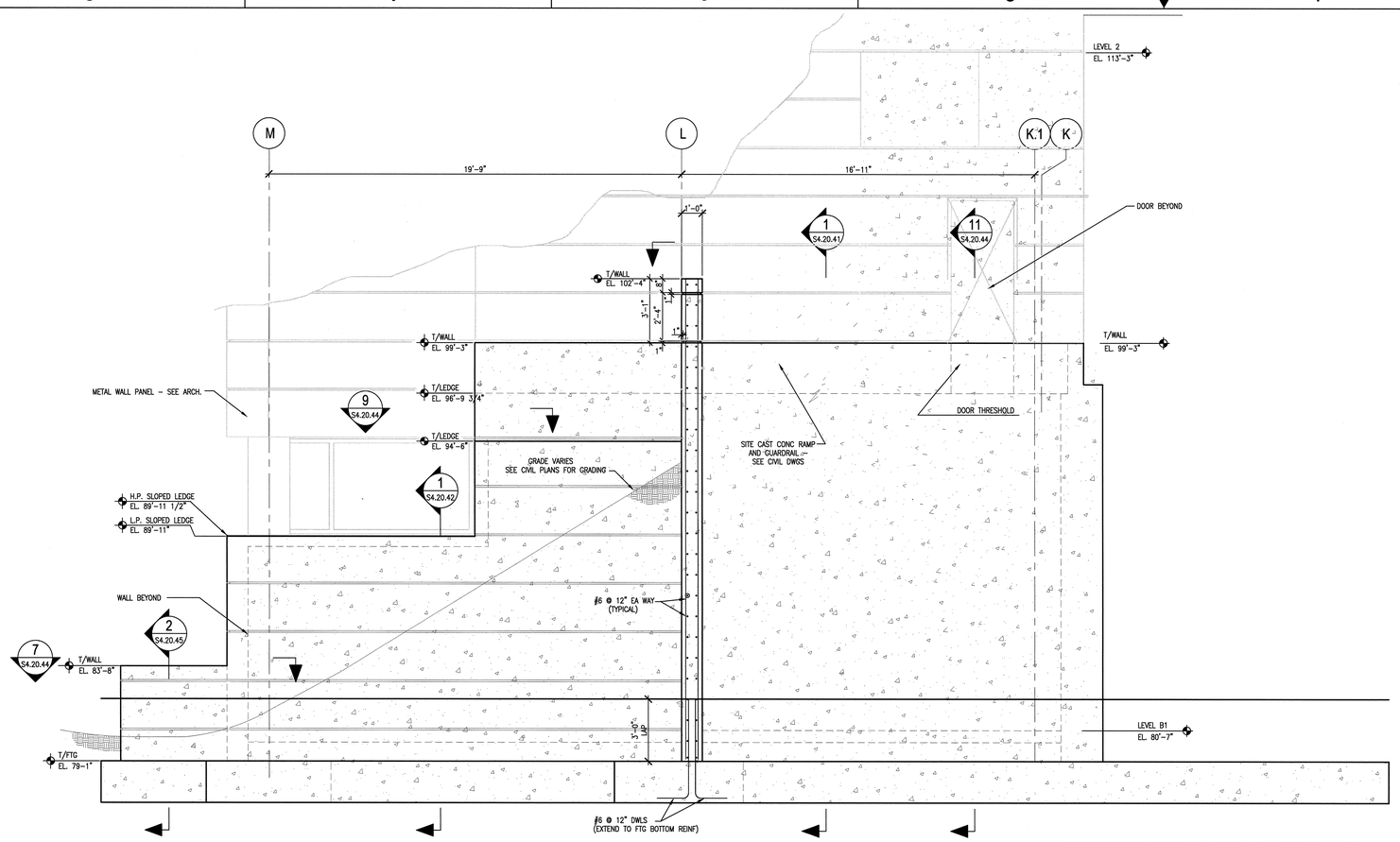

12 S2.B1.64 WEST ELEV. @ COL. LINE 1 SCALE: 3/8"=1'-0" SDT032006-2B

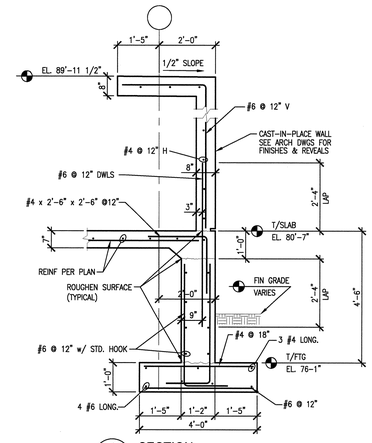

1 S2.B1.63 SECTION SCALE: 1/2"=1'-0" SDT032001-2B

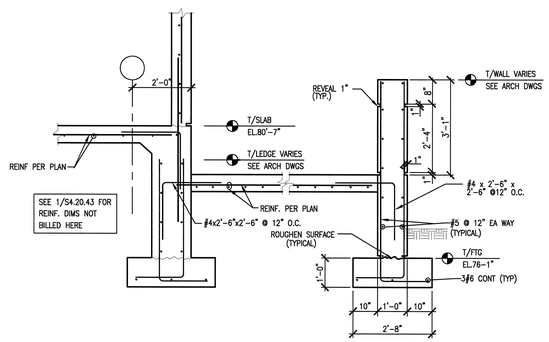

2 S2.B1.63 SECTION AT STAIR SCALE: 1/2"=1'-0" SDT032001-2B

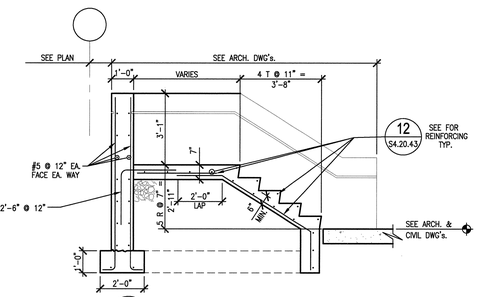

13 S2.B1.63 SECTION @ STAIRS "B,C,D,E,F&G" SCALE: 3/8"=1'-0" SDT032006-2B

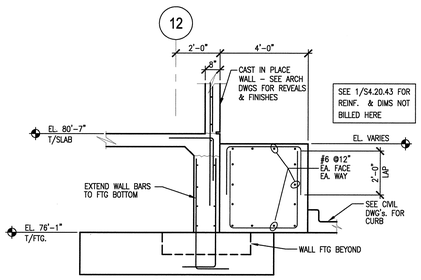

4 S2.B1.63 SECTION THRU SERVICE RAMP SCALE: 3/8"=1'-0" SDT032006-2B

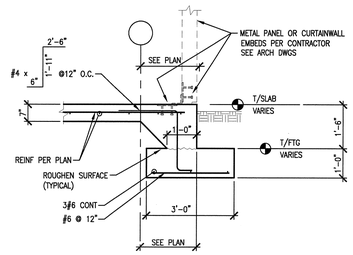

3 S2.B2.62 SECTION SCALE: 1/2"=1'-0" SDT032001-2B

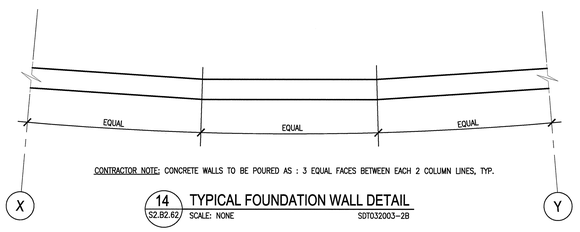

CONTRACTOR NOTE: CONCRETE WALLS TO BE POURED AS : 3 EQUAL FACES BETWEEN EACH 2 COLUMN LINES, TYP.

14 S2.B2.62 TYPICAL FOUNDATION WALL DETAIL SCALE: NONE SDT032003-2B

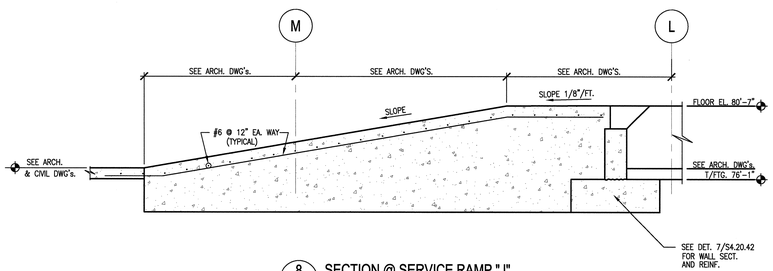

8 S2.B1.63 SECTION @ SERVICE RAMP "J" SCALE: 3/8"=1'-0" SDT032006-2B

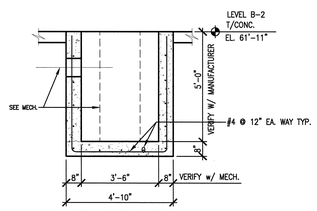

16 S2.B2.62 SECTION @ SUMP PIT SCALE: 3/8"=1'-0" SDT032006-2B

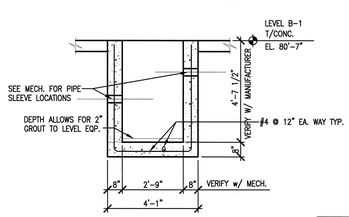

15 S2.B2.62 SECTION @ GREASE SEPARATOR SCALE: 3/8"=1'-0" SDT032006-2B

VOID — 5,5A S4.20.43 SECTION SCALE: 1/2"=1'-0" SDT032001-2B

VOID — 6 S4.20.43 SECTION SCALE: 1/2"=1'-0" SDT032001-2B

VOID — 7 S4.20.43 TOP OF RET. WALL DETAIL SCALE: 1/2"=1'-0" SDT032001-2B

ALTERNATE BID #2 VOID SEE DWG. S4-20-46 — 10 S2.B1.65 WALKWAY FOOTING DETAILS 1/4" = 1'-0" SDT032005-2B

ALTERNATE BID #2 VOID SEE DWG. S4-20-46 — 11 S2.B1.65 WALKWAY FOOTING DETAILS 1/4" = 1'-0" SDT032005-2B

ALTERNATE BID #2 VOID SEE DWG. S4-20-46 — 9 S2.B1.63 WALKWAY FOOTING DETAILS 1/4" = 1'-0" SDT032005-2B (N TO S)

3' 2' 1' 0 3' 6' SCALE: 3/8" = 1'-0"
4' 2' 0 4' 8' SCALE: 1/4" = 1'-0"
2' 1' 0 2' 4' SCALE: 1/2" = 1'-0"

NO REPRESENTATION OR WARRANTY, EXPRESSED OR IMPLIED, IS MADE AS TO THE ACCURACY, COMPLETENESS OR USEFULNESS OF THE INFORMATION OR STATEMENTS CONTAINED IN THESE DRAWINGS, OR THAT THE USE OR DISCLOSURE OF ANY INFORMATION, APPARATUS, METHOD, OR PROCESS DISCLOSED IN THESE DRAWINGS MAY NOT INFRINGE PRIVATE RIGHTS OF OTHERS. NO LIABILITY IS ASSUMED WITH RESPECT TO THE USE OF, OR FOR DAMAGES RESULTING FROM THE USE OF ANY INFORMATION, APPARATUS, METHOD, OR PROCESS DISCLOSED IN THESE DRAWINGS. DRAWINGS MADE AVAILABLE FOR INFORMATION TO BIDDER ARE NOT TO BE USED FOR OTHER PURPOSES AND ARE TO BE RETURNED UPON REQUEST OF THE FORWARDING CONTRACTOR.

NUMBER OF SECTION OR DETAIL — DRAWING ON WHICH SECTION OR DETAIL IS SHOWN OR TAKEN
SECTION AND DETAIL KEY

THIS DOCUMENT CONTROLLED BY
CHANGE CONTROL SYSTEM 4
ENGINEERING PROCEDURE SNS-ENG-G001

REV	CHANGE TYPE	CHANGE CONTROL SYSTEM	CHANGE REQUEST NUMBER	DESCRIPTION	DSN	CHK	DEPT
2				CERTIFIED FOR CONSTRUCTION - 12/20/01	RW	JJB	
1				CERTIFIED FOR CONSTRUCTION - MAY 15, 2001	WLS	SC	
0				CERTIFIED FOR CONSTRUCTION - OCTOBER 25, 2000	WLS	SC	

REVISION OR ISSUE PURPOSE

DATE	PE	DATE	PJ	DATE	REQ	DATE	UTB	DATE	RPE	RPE NO	DATE
									JJB	23236	12/20/01
	CLG	9/6/01	JS	8/21/01					JJB	23236	12/20/01
							JRL	9/25/01	JJB	23236	10/25/00

REVISION APPROVALS

ST	CV	EC	EE	EM	IE	M	PD	SE	AR
RW	AW	BWJ	PD	BWJ	BWJ	--	BWJ	--	ED
SC	AW	WRS	RL	WRS	BWJ	--	WRS	--	WAS
SC		WRS	RL	WRS	BWJ	--	WRS	--	WAS

SQUAD CHECK

RPE — JOHN BUSCH, REGISTERED ENGINEER, AGRICULTURE, COMMERCE, NO. 23236, STATE OF TENNESSEE — REV. 2 DATE 12/21/01

DSN	W. SONNA	5/15/01	
DRW	T. DEADY	5/15/01	
CHK	R. WALKINGTON	5/15/01	
DEPT			
PE	C.L. GARREN	9/6/01	
PJ	J. STELLERN	8/21/01	
REQ			
UTB	J.R. LAWSON	9/25/01	

DRAWING APPROVALS

108031400-S8E-8600-A011

Knight/Jacobs Joint Venture
701 Scarboro Road, MS 8253
Oak Ridge, TN 37830
865-241-9433
fax 865-241-3400

KNIGHT — Knight Advanced Technology — 240 West Randolph Street, Chicago, IL 60601

UT-BATTELLE — Oak Ridge National Laboratory — managed for the DEPARTMENT OF ENERGY under U.S. GOVERNMENT contract DE-AC05-000R22725 — UT-BATTELLE, LLC, + Oak Ridge, Tennessee

PROJECT NAME:
SPALLATION NEUTRON SOURCE
CENTRAL LAB AND OFFICE BUILDING
CONCRETE
SECTIONS AND DETAILS

1	48	49	50	PLANT	BLDG	FL	SH.	OF	TYPE	CLASS
3	S	X	X	8	8600		1	1	S	U
51		52		53	WBS		S4.20.43			REV
NC		NA			1.8.3.14					2

Date: 12/17/2001 Time: 16:40:21
Username: SDM0TE
DGN=P:\R\EPROJECTS\1001\R8_CAD01\A0K_2B\140_PLOT\S4-20-43.DWG