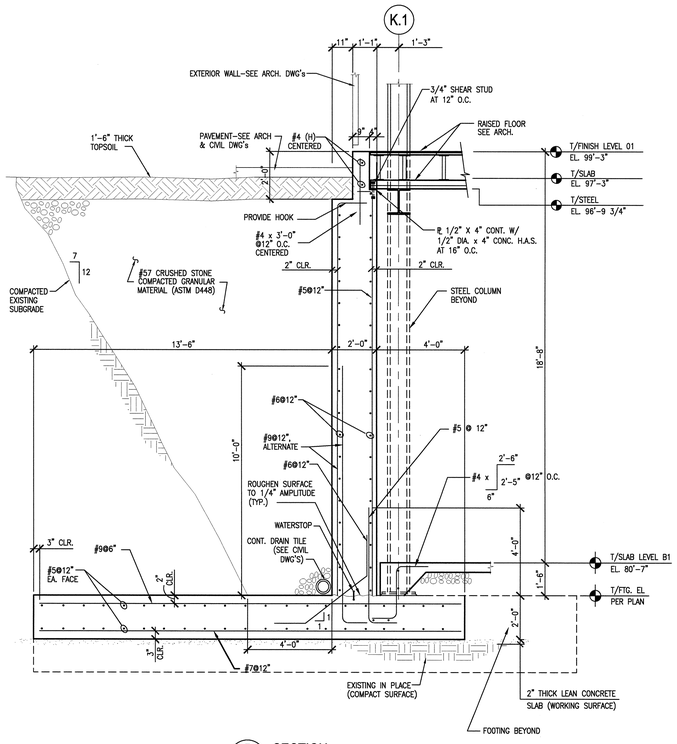

5 SECTION
S2.B1.64 SCALE: 3/8"=1'-0" SDT032004-2B

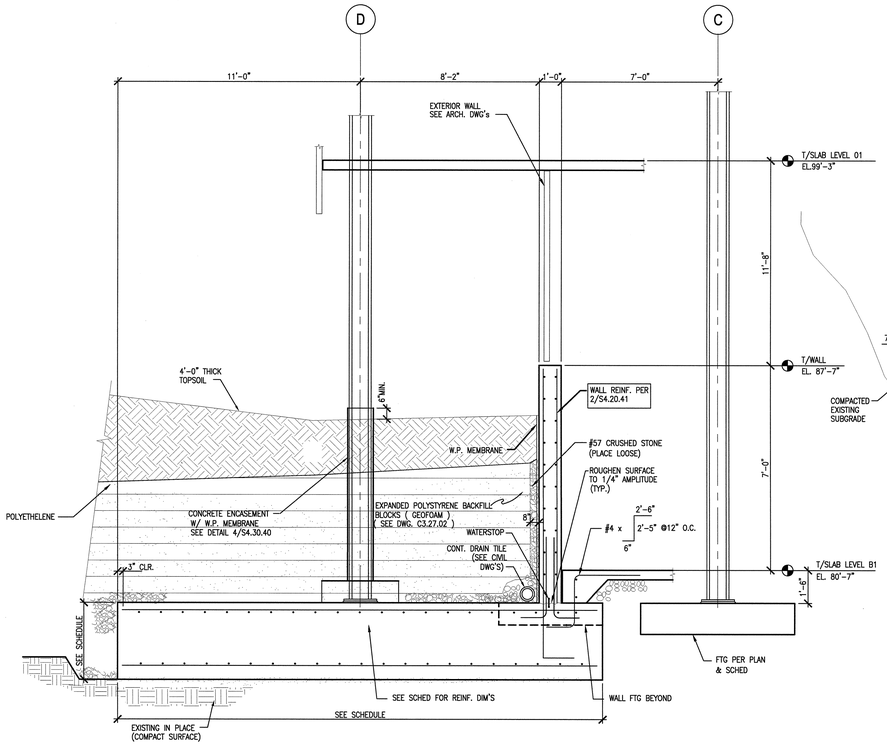

3 SECTION
S4.20.41 SCALE: 3/8"=1'-0" SDT032004-2B

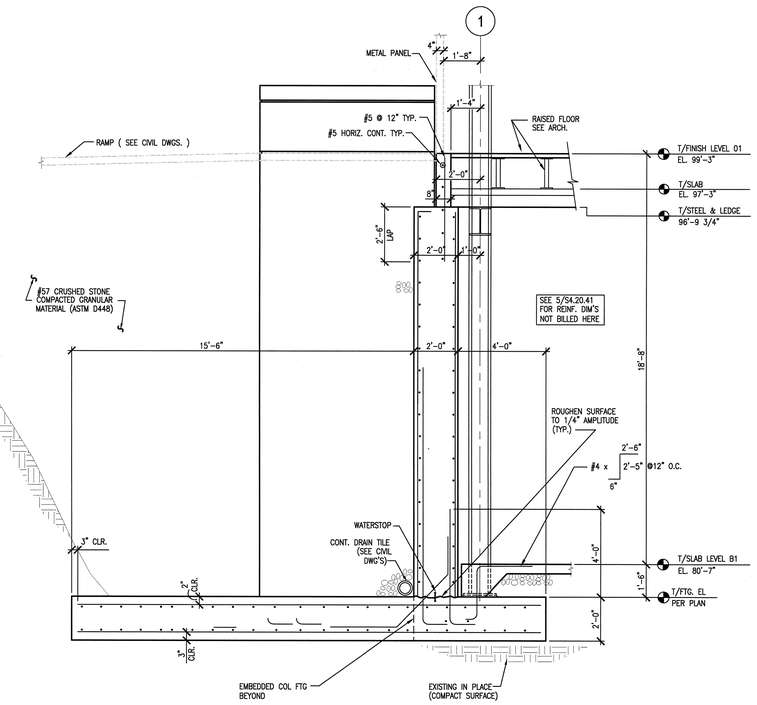

1 SECTION
S2.B1.64 SCALE: 3/8"=1'-0" SDT032004-2B

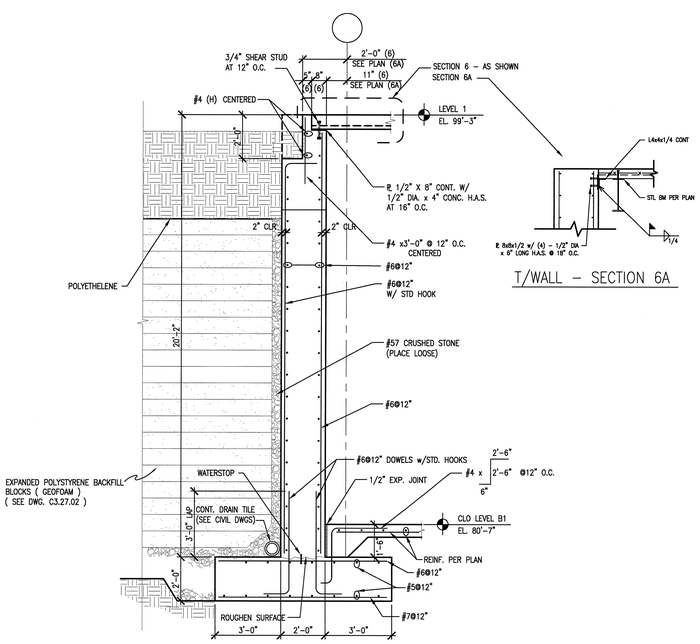

T/WALL - SECTION 6A

6,6A SECTION
S2.B1.61 SCALE: 3/8"=1'-0" SDT032004-2B

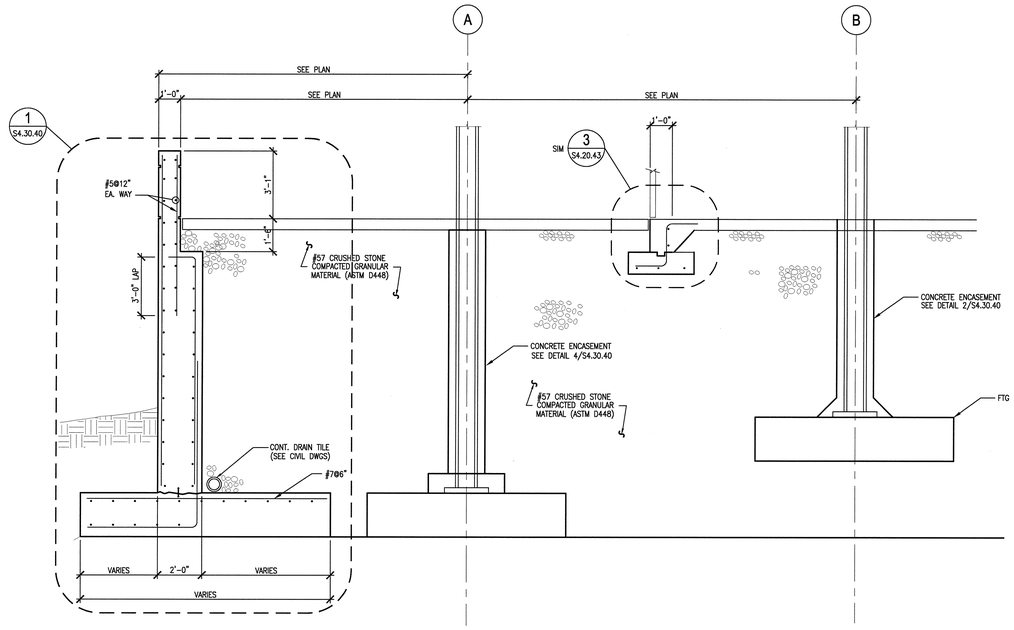

4 SECTION
S2.82.62 SCALE: 3/8"=1'-0" SDT032004-2B

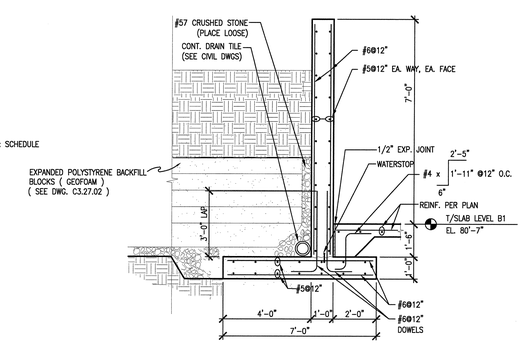

2 SECTION
S2.B1.61 SCALE: 3/8"=1'-0" SDT032004-2B

3' 2' 1' 0 3' 6'
SCALE: 3/8" = 1'-0"

NO REPRESENTATION OR WARRANTY, EXPRESSED OR IMPLIED, IS MADE AS TO THE ACCURACY, COMPLETENESS OR USEFULNESS OF THE INFORMATION OR STATEMENTS CONTAINED IN THESE DRAWINGS, OR THAT THE USE OR DISCLOSURE OF ANY INFORMATION, APPARATUS, METHOD, OR PROCESS DISCLOSED IN THESE DRAWINGS MAY NOT INFRINGE PRIVATE RIGHTS OF OTHERS. NO LIABILITY IS ASSUMED WITH RESPECT TO THE USE OF, OR FOR DAMAGES RESULTING FROM THE USE OF ANY INFORMATION, APPARATUS, METHOD, OR PROCESS DISCLOSED IN THESE DRAWINGS. DRAWINGS MADE AVAILABLE FOR INFORMATION TO BIDDER ARE NOT TO BE USED FOR OTHER PURPOSES AND ARE TO BE RETURNED UPON REQUEST OF THE FORWARDING CONTRACTOR.

NUMBER OF SECTION OR DETAIL
DRAWING ON WHICH SECTION OR DETAIL IS SHOWN OR TAKEN
SECTION AND DETAIL KEY

THIS DOCUMENT CONTROLLED BY
CHANGE CONTROL SYSTEM 4
ENGINEERING PROCEDURE SNS-ENG-0001

REV	CHANGE TYPE	CHANGE CONTROL SYSTEM	CHANGE REQUEST NUMBER	DESCRIPTION	DSN	CHK	DEPT	DATE	PE	DATE	PJ	DATE	REQ	DATE	UTB	DATE	RPE	RPE NO	DATE	RW	AW	BWJ	PD	BWJ	BWJ	--	BWJ	--	ED	ST	CV	EC	EE	EM	IE	M	PD	SE	AR
2				CERTIFIED FOR CONSTRUCTION - 12/20/01	RW	JJB				12/18/01		12/18/01				12/26/01	JJB	23236	12/20/01	RW	AW	BWJ	PD	BWJ	BWJ	--	BWJ	--	ED										
1				CERTIFIED FOR CONSTRUCTION - MAY 15, 2001	WLS	SC			CLG	9/6/01	AJS	8/21/01			JRL	9/25/01	JJB	23236	12/20/01	SC	AW	WRS	RL	WRS	BWJ	--	WRS	--	WAS										
0				CERTIFIED FOR CONSTRUCTION - OCTOBER 25, 2000	WLS	SC											JJB	23236	10/25/00	SC		WRS	RL	WRS	BWJ	--	WRS	--	WAS										

REVISION OR ISSUE PURPOSE — REVISION APPROVALS — SQUAD CHECK

RPE: JOHN BUSCH, REGISTERED ENGINEER, AGRICULTURE, COMMERCE, NO. 23236, STATE OF TENNESSEE
REV. 2 DATE 12/26/01

DSN	W. SONNA	5/15/01
DRW	T. DEADY	5/15/01
CHK	R. WALKINGTON	5/15/01
DEPT		
PE	C.L. GARREN	9/6/01
PJ	J. STELLERN	8/21/01
REQ		
UTB	J.R. LAWSON	9/25/01

DRAWING APPROVALS

108031400-S8E-8600-A009

Knight/Jacobs Joint Venture
701 Scarboro Road, MS 8253
Oak Ridge, TN 37830
865-241-9433
fax 865-241-3400

KNIGHT
Knight Advanced Technology
540 West Madison Street
Chicago, IL 60661

UT-BATTELLE
Oak Ridge National Laboratory
managed for the DEPARTMENT OF ENERGY under U.S. GOVERNMENT contract DE-AC05-00OR22725
UT-BATTELLE, LLC. ◦ Oak Ridge, Tennessee

PROJECT NAME:
SPALLATION NEUTRON SOURCE
CENTRAL LAB AND OFFICE BUILDING CONCRETE
SECTIONS AND DETAILS

1	48	49	50	PLANT	BLDG	FL	SH.	OF	TYPE	CLASS
3	S	X	X	8	8600		1	1	S	U
51		52		53	WBS					REV
NC		NA			1.8.3.14		S4.20.41			2

AutoCAD
Date: 12/17/2001 Time: 18:43:11
Username: DEADYTE
DY-F:\M02PROJECTS\7000\706\2600\706_2B\740_PLOT\24-20-41.DWG