NEXT ASS'Y: 1 FINAL ASS'Y:

NOTES:

1.) TYPICAL SLAB @ STEEL FRAMING, U.N.O. 2" DEEP, 19 GAGE, GALV. COMPOSITE STEEL DECK WITH 3 1/4" LIGHT WEIGHT CONCRETE TOPPING REINFORCED w/6x6-W2.9xW2.9.

2.) H.P. DESIGNATES T/CONC. EL. 150'-0"
T/STEEL EL. 149'-6 3/4"

USE L.P. T/STL. & T/CONC. U.N.O.

3.) L.P. DESIGNATES T/CONC. EL. 149'-4"
T/STEEL EL. 148'-10 3/4"

4.) SEE DWGS. S3.10.40, S3.10.41 & S3.10.42 FOR MEMBER SIZES NOT SHOWN.

5.) DENOTES FULLY DEVELOPED MOMENT CONNECTION.

6.) DENOTES BRACING LOCATION.

7.) ( ) INDICATES NUMBER OF 3/4"øX4" HEADED STUDS BETWEEN INTERSECTING BEAMS.

8.) [ ] INDICATES REQUIRED IN PLACE CAMBER AT MIDSPAN OF BEAM.

9.) DENOTES REQUIRED VERTICAL SHEAR CAPACITY FOR CONNECTION AT THAT END OF BEAM.

10.) DENOTES SPAN DIRECTION OF COMPOSITE STEEL DECK SEE SHT. S5.20.40 FOR TYPICAL COMPOSITE STEEL SLAB DETAILS.

11.) SEE SHT. S5.30.40 FOR COLUMN SCHEDULE.

12.) SLAB EDGES ARE NOT CURVED; PROVIDE 3 EQUAL STRAIGHT SEGMENTS BETWEEN COLUMN LINES, TYP. SEE DETAIL 14/S4.20.43

13.) SEE SHT. S5.20.40 FOR TYPICAL DETAILS.

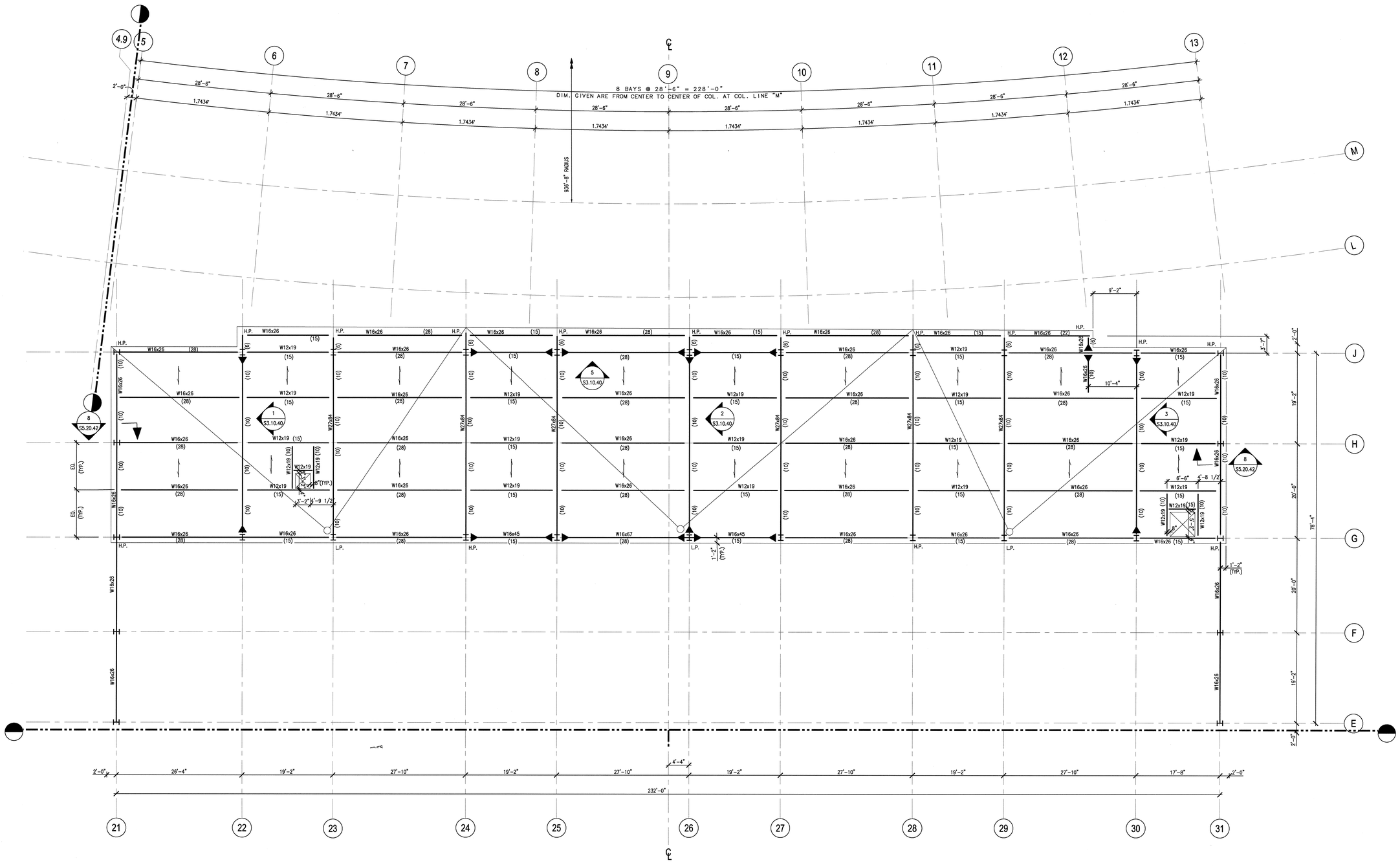

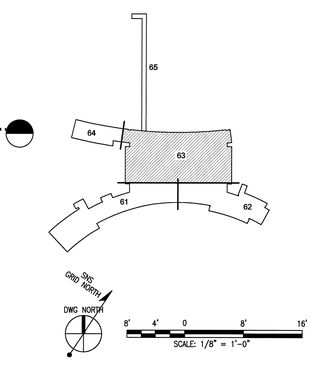

108031400-S8E-8600-A044

Knight Jacobs

KnightJacobs Joint Venture
701 Scarboro Road, MS 8253
Oak Ridge, TN 37830
865-241-9433
fax 865-241-3400

KNIGHT
Knight Advanced Technology
540 West Randolph Street
Chicago, IL 60661

UT-BATTELLE

Oak Ridge National Laboratory
managed for the DEPARTMENT OF ENERGY under
U.S. GOVERNMENT contract DE-AC05-00OR22725
UT-BATTELLE, LLC, © Oak Ridge, Tennessee

PROJECT NAME:
SPALLATION NEUTRON SOURCE
CENTRAL LAB AND OFFICE BUILDING
FRAMING PLAN
LEVEL 5, SECTOR 63

1	48	49	50	PLANT	BLDG	FL	SH.	OF	TYPE	CLASS
3	S	X	X	8	8600		1	1	P	U
51		52		53	WBS					REV
NC		NA			1.8.3.14		S2.05.63			1

DSN	W. SONNA	5/15/01
DRW	T. DEADY	5/15/01
CHK	R. WALKINGTON	5/15/01
DEPT		
PE	C.L. GARREN	9/6/01
PJ	J. STELLERN	8/21/01
REQ		
UTB	J.R. LAWSON	9/25/01

RPE: REGISTERED ENGINEER JOHN BUSCH, AGRICULTURE, COMMERCE, NO. 23236, STATE OF TENNESSEE

REV. 1 DATE 12/20/01

DRAWING APPROVALS

REV	CHANGE TYPE	CHANGE CONTROL SYSTEM	CHANGE ORDER NUMBER	DESCRIPTION	DSN	CHK	DEPT
1	–	–	–	CERTIFIED FOR CONSTRUCTION – 12/20/01	RW	JJB	
0	–	–	–	CERTIFIED FOR CONSTRUCTION – MAY 15, 2001	WLS	SC	

REVISION OR ISSUE PURPOSE

DATE	PE	DATE	PJ	DATE	REQ	DATE	UTB	DATE	RPE	RPE NO	DATE
	CLG	9/6/01	JJS	8/21/01			JRL	9/25/01	JJB	23236	5/15/01
								12/20/01	JJB	23236	12/20/01

REVISION APPROVALS

ST	CV	EC	EE	EM	IE	M	PD	SE	AR
RW	AW	BWJ	PD	BWJ	BWJ	--	BWJ	--	ED
RW	AW	BWJ	PD	BWJ	BWJ	--	BWJ	--	ED

SQUAD CHECK

NO REPRESENTATION OR WARRANTY, EXPRESSED OR IMPLIED, IS MADE AS TO THE ACCURACY, COMPLETENESS OR USEFULNESS OF THE INFORMATION OR STATEMENTS CONTAINED IN THESE DRAWINGS, OR THAT THE USE OR DISCLOSURE OF ANY INFORMATION, APPARATUS, METHOD, OR PROCESS DISCLOSED IN THESE DRAWINGS MAY NOT INFRINGE PRIVATE RIGHTS OF OTHERS. NO LIABILITY IS ASSUMED WITH RESPECT TO THE USE OF, OR FOR DAMAGES RESULTING FROM THE USE OF ANY INFORMATION, APPARATUS, METHOD, OR PROCESS DISCLOSED IN THESE DRAWINGS. DRAWINGS MADE AVAILABLE FOR INFORMATION TO BIDDER ARE NOT TO BE USED FOR OTHER PURPOSES AND ARE TO BE RETURNED UPON REQUEST OF THE FORWARDING CONTRACTOR.

NUMBER OF SECTION OR DETAIL
DRAWING ON WHICH SECTION OR DETAIL IS SHOWN OR TAKEN
SECTION AND DETAIL KEY

THIS DOCUMENT CONTROLLED BY
CHANGE CONTROL SYSTEM 4
ENGINEERING PROCEDURE SNS-ENG-G001

Date: 12/19/2001 Time: 13:13:57
Username: SONNAWS
DR-F:\R22\PROJECTS\7000\700\D600\D06_S8\740_FLST\S2-05-63.DWG

AutoCAD