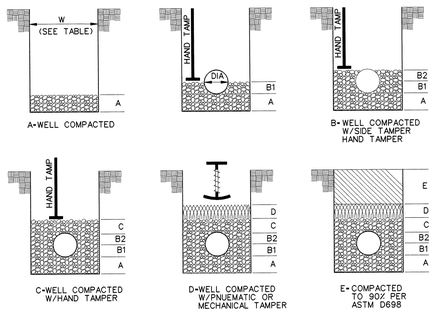

BEDDING AND BACKFILL FOR HDPE PIPE		
LAYER	DEPTH	MATERIAL
A	6"	NO. 57 CRUSHED STONE
B1	DIA/2	NO. 57 CRUSHED STONE
B2	DIA/2	NO. 57 CRUSHED STONE
C	12"	NO. 57 CRUSHED STONE
D	VARIES	SILT, SILTY CLQAYS AND CLAYS, INCLUDING INORGANIC CLAYS AND SILTS OF MEDIUM TO HIGH PLASTICITY AND LIQUID LIMITS
E	VARIES	SILT, SILTY CLQAYS AND CLAYS, INCLUDING INORGANIC CLAYS AND SILTS OF MEDIUM TO HIGH PLASTICITY AND LIQUID LIMITS

NOTE:
PIPES UNDER PAVED AREAS WHERE DEPTH OF COVER IS 6 FEET OR LESS SHALL BE BACKFILLED WITH NO 57 CRUSHED STONE TO PAVEMENT SUBGRADE.

TRENCH WIDTH FOR HDPE AND CMP PIPE		
DIAMETER	OUTSIDE DIA (IN)	W (IN)
4"	4.72	21
6"	6.95	23
8"	9.16	25
10"	11.31	28
12"	14.45	31
15"	17.65	34
18"	21.10	39
24"	28.30	48
30"	36.10	66
36"	42.25	78
42"	47.00	83
48"	53.00	89

1 TYP — TRENCH, BEDDING & BACKFILL FOR HDPE PIPE
NTS

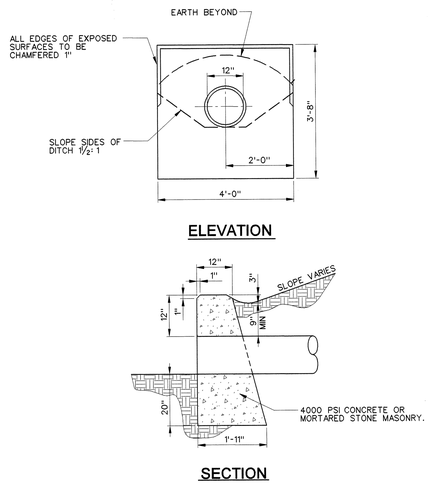

2 C3.35.05 — CAST IN-PLACE HEADWALL
NTS

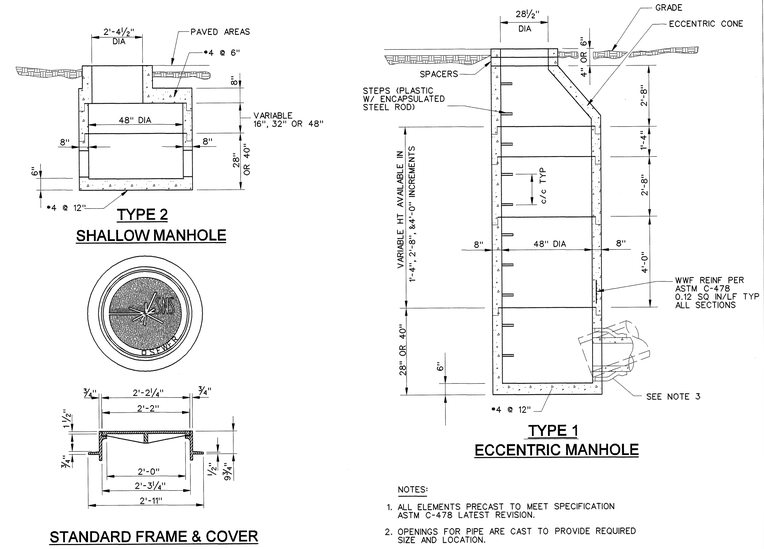

NOTES:
1. ALL ELEMENTS PRECAST TO MEET SPECIFICATION ASTM C-478 LATEST REVISION.
2. OPENINGS FOR PIPE ARE CAST TO PROVIDE REQUIRED SIZE AND LOCATION.
3. THE HOLE IS TO BE MANUFACTURED AS TO ALLOW FOR LATERAL AND VERTICAL MOVEMENT, AS WELL AS ANGULAR ADJUSTMENTS THRU 20°.
4. CM WILL PROVIDE SPECIFICATIONS AND CAST NUMBER FOR SNS MANHOLE COVER.

3 C3.35.01, C3.35.02 — JUNCTION BOX DETAIL
NTS

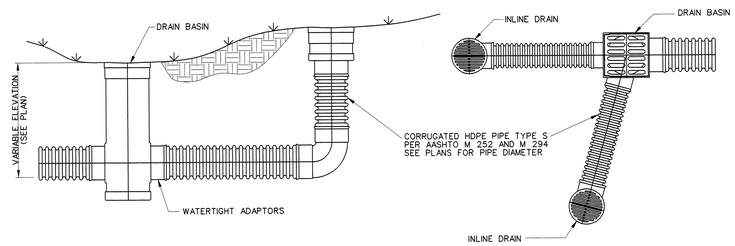

4 C3.35.01, C3.35.02, C3.35.03, C3.35.04 — DRAIN BASIN AND INLINE DRAIN STORM SEWER SYSTEM
NTS

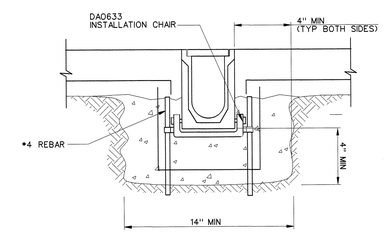

5 C3.35.01 — STANDARD TRENCH DRAIN CHAIR INSTALLATION
NTS

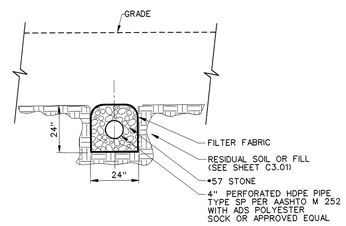

6 TYP — PERFORATED PIPE BEDDING DETAIL
NTS

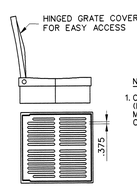

NOTES:
1. CASTING SHALL BE NYOPLAST 15" PEDESTRIAN (H-10) RATED GRATE WITH NICKLE BRONZE TOP TO MATCH J.R. SMITH #1409 ROOF DRAIN SPECIFIED ON P2.B1.62 OR APPROVED EQUAL.

7 C3.35.03, C3.35.04 — PEDESTRIAN GRATE FOR HARDSCAPED AREAS
NTS

NOTES:
1. DUCTILE IRON SHALL CONFORM TO ASTM A48 - CLASS 30B.
2. CASTINGS SHALL BE PAINTED BLACK.
3. CASTING SHALL BE NYOPLAST 8" DUCTILE IRON DOMED GRATE OR APPROVED EQUAL.

8 C3.35.01, C3.35.02, C3.35.03 — 8" DUCTILE IRON GRATES FOR LANDSCAPED AREAS
NTS

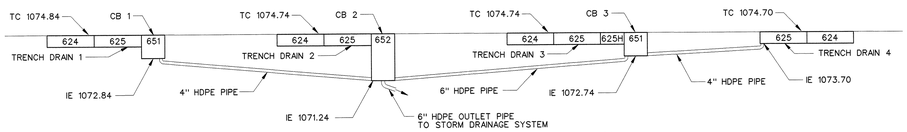

NOTE:
???

NOTES:
1. TRENCH DRAIN AND CATCHBASINS SHALL BE POLYCAST 600 SERIES PRESLOPED TRENCH DRAINS OR APPROVED EQUAL.
2. POLYCAST 600 SERIES PART NUMBERS ARE SHOWN ON LAYOUT.
3. GRATES SHALL BE POLYCAST GRAY IRON SLOTTED GRATES OR APPROVED EQUAL.

9 C3.35.01 — TRENCH DRAIN LAYOUT
NTS

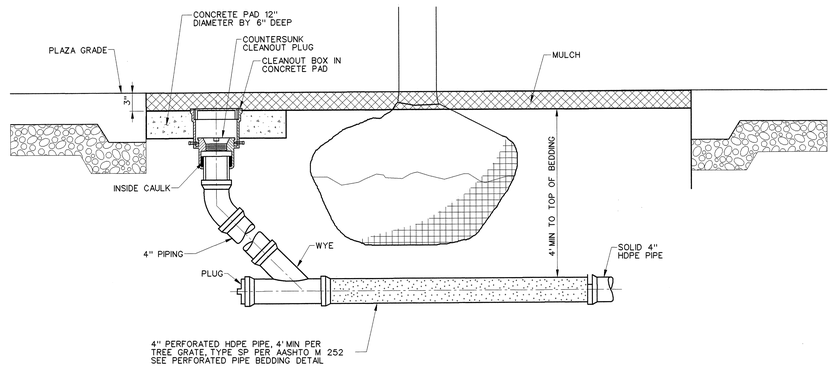

10 C3.35.01, C3.35.02, C3.35.03, C3.35.04, C3.35.05 — SUBGRADE DRAIN & CLEANOUT DETAIL
NTS

NO REPRESENTATION OR WARRANTY, EXPRESSED OR IMPLIED, IS MADE AS TO THE ACCURACY, COMPLETENESS OR USEFULNESS OF THE INFORMATION OR STATEMENTS CONTAINED IN THESE DRAWINGS, OR THAT THE USE OR DISCLOSURE OF ANY INFORMATION, APPARATUS, METHOD, OR PROCESS DISCLOSED IN THESE DRAWINGS MAY NOT INFRINGE PRIVATE RIGHTS OF OTHERS. NO LIABILITY IS ASSUMED WITH RESPECT TO THE USE OF, OR FOR DAMAGES RESULTING FROM THE USE OF ANY INFORMATION, APPARATUS, METHOD, OR PROCESS DISCLOSED IN THESE DRAWINGS. DRAWINGS MADE AVAILABLE FOR INFORMATION TO BIDDER ARE NOT TO BE USED FOR OTHER PURPOSES AND ARE TO BE RETURNED UPON REQUEST OF THE FORWARDING CONTRACTOR.

NUMBER OF SECTION OR DETAIL
DRAWING ON WHICH SECTION OR DETAIL IS SHOWN OR TAKEN
SECTION AND DETAIL KEY

THIS DOCUMENT CONTROLLED BY
CHANGE CONTROL SYSTEM 4
ENGINEERING PROCEDURE SNS-ENG-G001

REV	CHANGE TYPE	CHANGE CONTROL SYSTEM	CHANGE REQUEST NUMBER	DESCRIPTION	DSN	CHK	DEPT	DATE	PE	DATE	PJ	DATE	REQ	DATE	UTB	DATE	RPE	RPE NO	DATE	ST	CV	EC	EE	EM	IE	M	PD	SE	AR
0				CERTIFIED FOR CONSTRUCTION - 5/15/01	BN	AW											BN	104112	5/15/01	SC	AW	BS	RL	BS	BJ	--	BS	--	WS

REVISION OR ISSUE PURPOSE — REVISION APPROVALS — SQUAD CHECK

RPE: BENJAMIN C. NEMEC, REGISTERED ENGINEER, COMMONWEALTH OF TENNESSEE, 104112, 5/15/01

DSGN	B. NEMEC	5/15/01
DRW	F. SANTI	5/15/01
CHKR	S. FRITTS	5/15/01
SECT		
DEPT		
PE		5/15/01
PJ		5/15/01
REQ		
UTB		5/15/01

REV. 0 DATE 5/15/01 — DRAWING APPROVALS

108031400-C8E-8600-A021

Knight/Jacobs Joint Venture
701 Scarboro Road, MS 8253
Oak Ridge, TN 37830
865-241-9433
fax 865-241-3400

BWSC Barge Waggoner Sumner & Cannon, Inc.
ENGINEERS ARCHITECTS PLANNERS LANDSCAPE ARCHITECTS AND SURVEYORS
855 Commerce Park Drive Suite 105, Oak Ridge, Tennessee 37830
Phone 865-86-0986 Fax 865-86-0988

UT-BATTELLE
Oak Ridge National Laboratory
managed for the DEPARTMENT OF ENERGY under U.S. GOVERNMENT contract DE-AC05-000R22725
UT-BATTELLE, LLC. • Oak Ridge, Tennessee

PROJECT NAME:
SPALLATION NEUTRON SOURCE

CENTRAL LAB AND OFFICE BUILDING
GRADING & DRAINAGE SECTIONS AND DETAILS

1	48	49	50	PLANT	BLDG	FL	SH.	OF	TYPE	CLASS
3	C	X	X	8	8600	X	1	1	S	U
51		52		53	WBS	DRAWING NUMBER				REV
NC		NA		IN	1.8.3.14	C4.35.01				0

05/11/01 05:48:07 PM
J:\700_CADD\TASK_01\TASK_01_35\700_Plot\c4_35_01.dgn