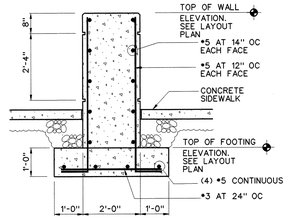

A C1.18.05 SECTION
SCALE : 1/2" = 1'-0"

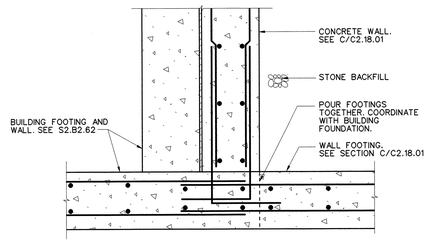

B C1.18.05 C1.18.06 SECTION
SCALE : 1/2" = 1'-0"

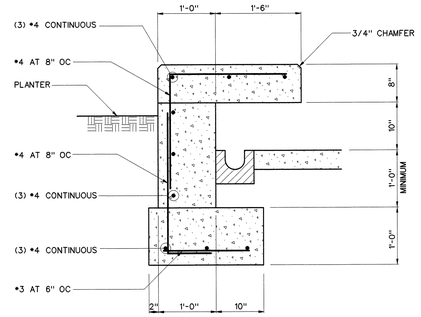

C C1.18.02 SECTION
SCALE : 1" = 1'-0"

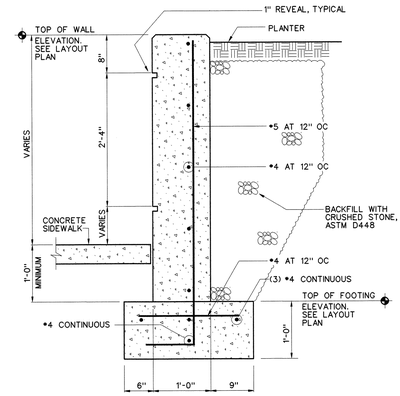

D C1.18.02 C1.18.03 C1.18.05 C1.18.06 SECTION
SCALE : 1" = 1'-0"

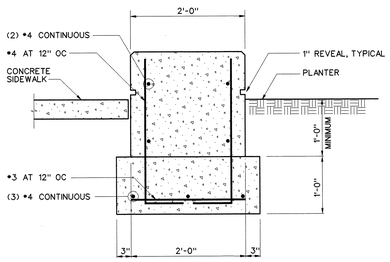

E C1.18.02 C1.18.03 C1.18.04 C1.18.05 SECTION
SCALE : 1" = 1'-0"

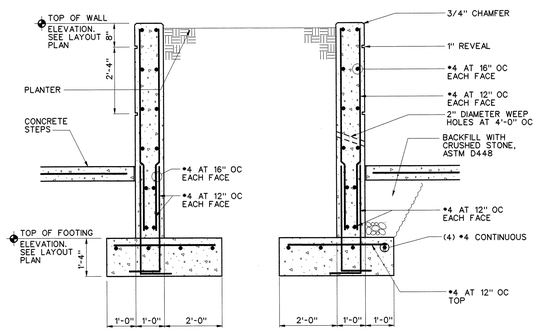

F C1.18.03 C1.18.05 SECTION
SCALE : 1/2" = 1'-0"

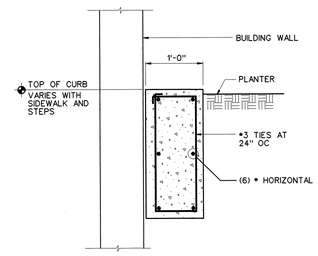

G C1.18.03 SECTION
SCALE : 1" = 1'-0"

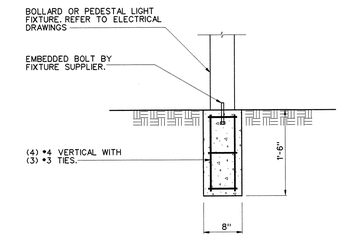

1 C2.18.02 DETAIL
SCALE : 1" = 1'-0"

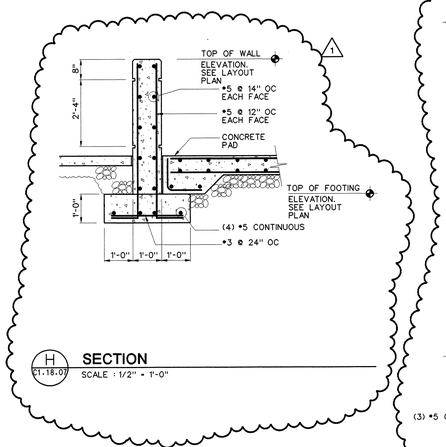

H C1.18.07 SECTION
SCALE : 1/2" = 1'-0"

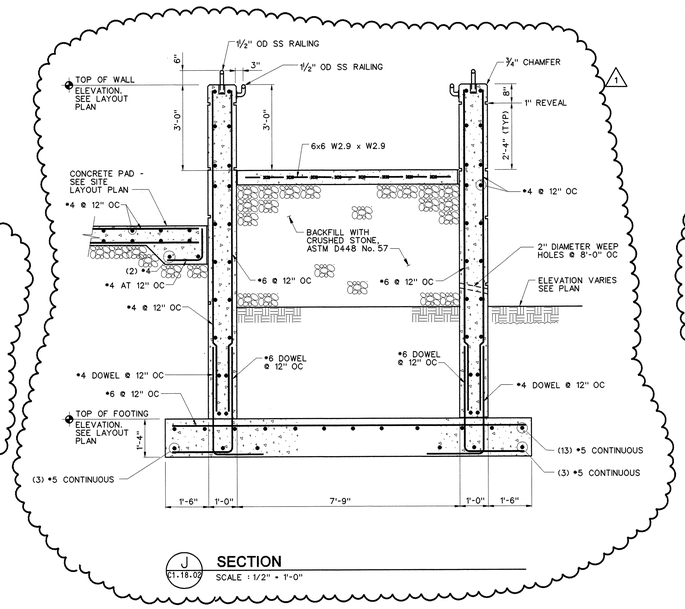

J C1.18.02 SECTION
SCALE : 1/2" = 1'-0"

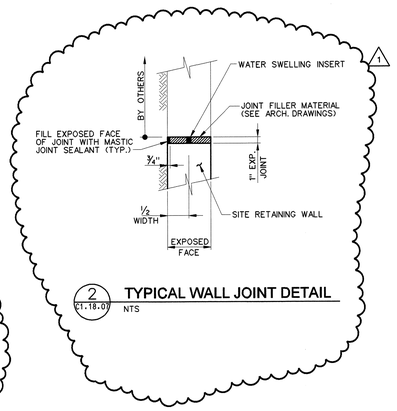

2 C1.18.07 TYPICAL WALL JOINT DETAIL
NTS

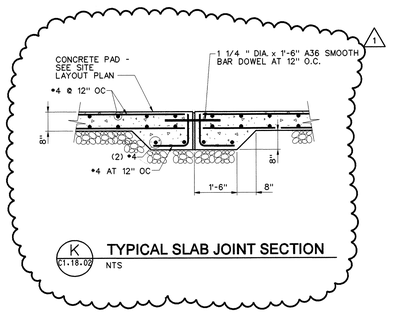

K C1.18.02 TYPICAL SLAB JOINT SECTION
NTS

1' 0 1' 2'
SCALE 1" = 1'-0"

2' 1' 0 2' 4'
SCALE: 1/2" = 1'-0"

108031400-C8E-8600-A030

Knight/Jacobs Joint Venture
701 Scarboro Road, MS 8253
Oak Ridge, TN 37830
865-241-9433
fax 865-241-3400

BWSC Barge Waggoner Sumner & Cannon, Inc.
ENGINEERS ARCHITECTS PLANNERS LANDSCAPE ARCHITECTS AND SURVEYORS
800 Commerce Park Drive Suite 100,Oak Ridge, Tennessee 37830 Phone 865-481-0646 Fax 865-481-0651

UT-BATTELLE
Oak Ridge National Laboratory
managed for the DEPARTMENT OF ENERGY under U.S. GOVERNMENT contract DE-AC05-000R22725
UT-BATTELLE, LLC. • Oak Ridge, Tennessee

PROJECT NAME:
SPALLATION NEUTRON SOURCE

CENTRAL LAB AND OFFICE BUILDING
RETAINING WALL SECTIONS AND DETAIL

1	48	49	50	PLANT	BLDG	FL	SH.	OF	TYPE	CLASS
3	C	X	X	8	8600	X	1	1	S	U
51		52		53	WBS	DRAWING NUMBER				REV
NC		NA		IN	1.8.3.14	C2.18.02				1

DSGN	B. MAHONEY	5/15/01
DRW	J. BALES	5/15/01
CHKR	A. WYLIE	5/15/01
SECT		
DEPT		
PE	C.L. GARREN	9/6/01
PJ	J. STELLERN	8/21/01
REQ		
UTB	J.R. LAWSON	9/25/01

DRAWING APPROVALS

RPE
BRIAN KETRON MAYNE
REGISTERED ENGINEER
STATE OF TENNESSEE
No. 19600
12-20-01
REV. 1 DATE 12-20-01

REV	CHANGE TYPE	CHANGE CONTROL SYSTEM	CHANGE REQUEST NUMBER	DESCRIPTION	DSN	CHK	DEPT	DATE	PE	DATE	PJ	DATE	REQ	DATE	UTB	DATE	RPE	RPE NO	DATE	ST	CV	EC	EE	EM	IE	M	PD	SE	AR
1	-	-	-	CERTIFIED FOR CONSTRUCTION - 12/20/01	BM	AW		12/20		12/20				12/20	BM	19600	12/20	RW	AW	BWJ	PD	BWJ	BWJ	-	BWJ	-	ED		
0				CERTIFIED FOR CONSTRUCTION - 5/15/2001	BM	AW		CLG 9/6		JS 8/21				JRL 9/25	BM	19600	5/15		AW										

REVISION OR ISSUE PURPOSE — REVISION APPROVALS — SQUAD CHECK

NO REPRESENTATION OR WARRANTY, EXPRESSED OR IMPLIED, IS MADE AS TO THE ACCURACY, COMPLETENESS OR USEFULNESS OF THE INFORMATION OR STATEMENTS CONTAINED IN THESE DRAWINGS, OR THAT THE USE OR DISCLOSURE OF ANY INFORMATION, APPARATUS, METHOD, OR PROCESS DISCLOSED IN THESE DRAWINGS MAY NOT INFRINGE PRIVATE RIGHTS OF OTHERS. NO LIABILITY IS ASSUMED WITH RESPECT TO THE USE OF, OR FOR DAMAGES RESULTING FROM THE USE OF ANY INFORMATION, APPARATUS, METHOD, OR PROCESS DISCLOSED IN THESE DRAWINGS. DRAWINGS MADE AVAILABLE FOR INFORMATION TO BIDDER ARE NOT TO BE USED FOR OTHER PURPOSES AND ARE TO BE RETURNED UPON REQUEST OF THE FORWARDING CONTRACTOR.

NUMBER OF SECTION OR DETAIL
DRAWING ON WHICH SECTION OR DETAIL IS SHOWN OR TAKEN
SECTION AND DETAIL KEY

THIS DOCUMENT CONTROLLED BY
CHANGE CONTROL SYSTEM 4
ENGINEERING PROCEDURE SNS-ENG-G001

12/20/01 04:50:51 PM
J:\700_CADD\TASK_01\TASK_01_18\Mod_Plot\c2_18_02.dgn