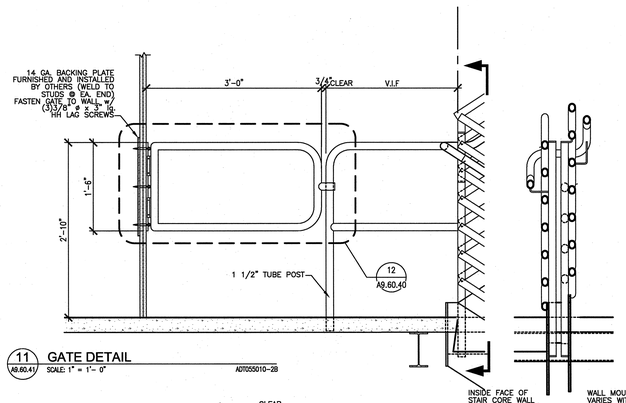


11 A9.60.41 GATE DETAIL
SCALE: 1" = 1'- 0"
A0T055010-2B

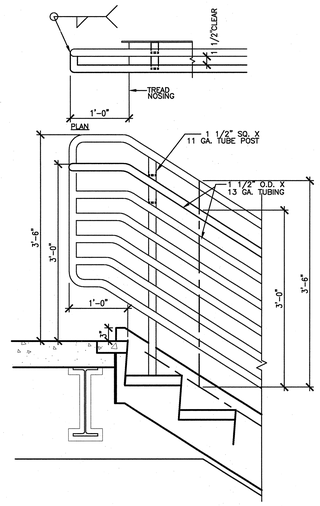


10 A9.60.41 STARTER RAIL EXTERIOR DETAIL - STAIR #11
SCALE: 1" = 1'- 0"
A0T055028-2B

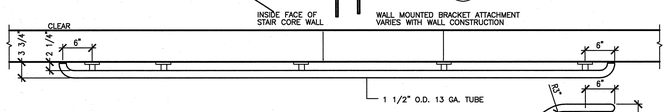


12 A9.60.41 HAND RAIL EXTERIOR DETAIL
SCALE: 1" = 1'- 0"
A0T055015-2B

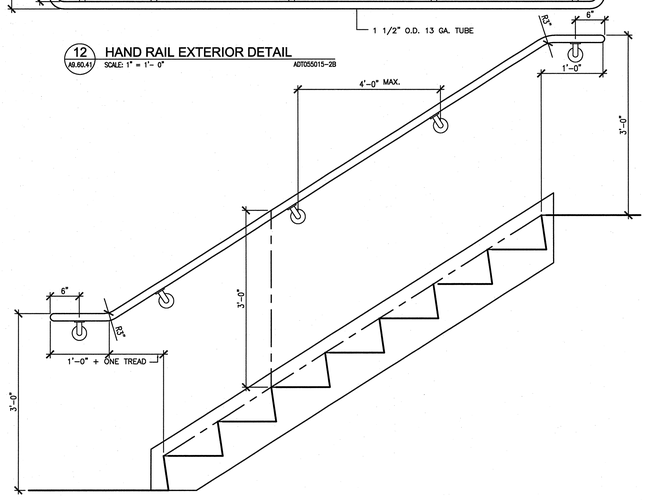


13 A9.60.41 WALL RAIL EXTERIOR DETAIL, TYP.
SCALE: 1" = 1'- 0"
A0T055016

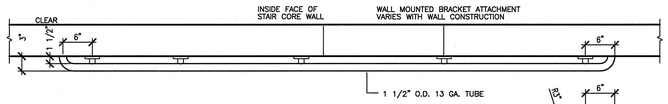


14 A9.60.41 HAND RAIL INTERIOR DETAIL, TYP.
SCALE: 1" = 1'- 0"
A0T055016-2B

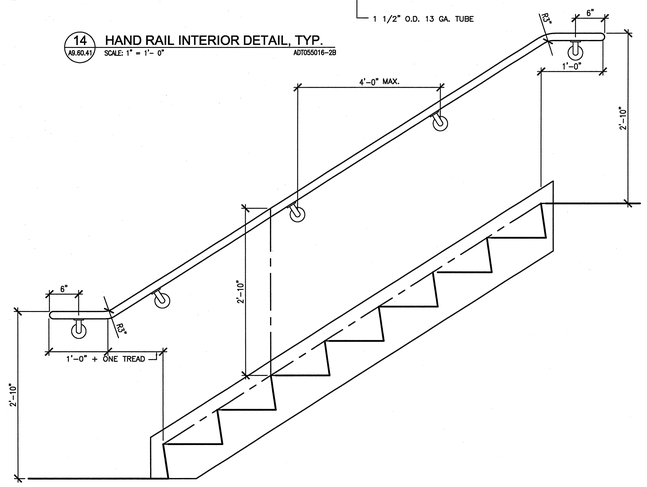


15 A9.60.41 WALL RAIL INTERIOR DETAIL, TYP.
SCALE: 1" = 1'- 0"
A0T055016-2B

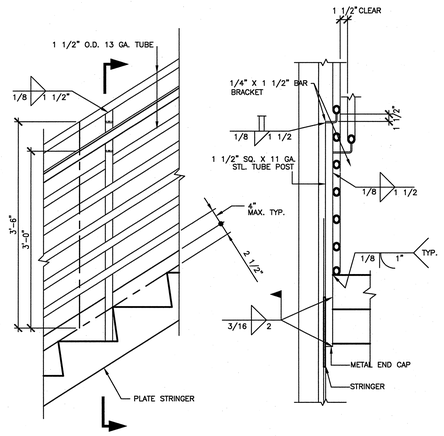


7 A9.60.41 INTERMEDIATE POST CONNECTION (STAIR 11)
SCALE: 1" = 1'- 0"
A0T055011-2B

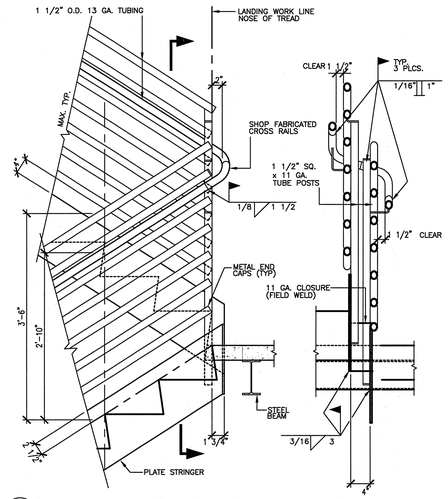


4 A9.60.41 LANDING RAIL DETAIL, STAIR #5
SCALE: 1" = 1'- 0"
A0T055007-2B

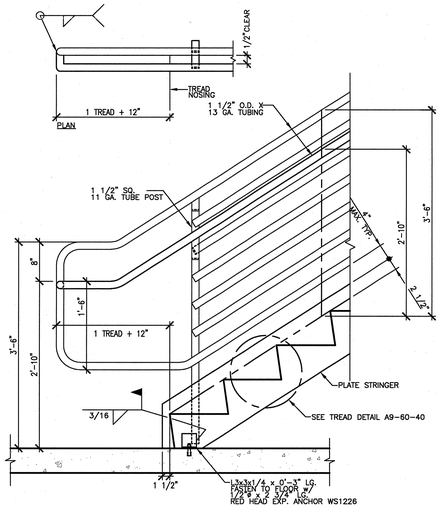


1 A5.30.41 STARTER RAIL DETAIL, TYP.
SCALE: 1" = 1'- 0"
A0T055005-2B

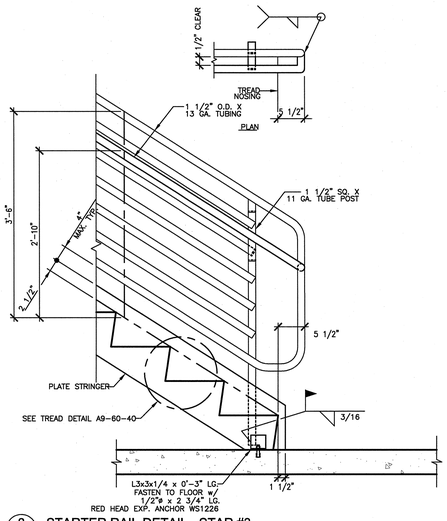


8 A9.60.41 STARTER RAIL DETAIL - STAR #3
SCALE: 1" = 1'- 0"
A0T055026-2B

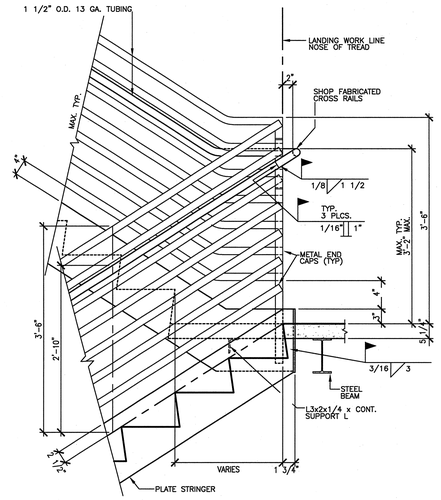


5 A5.30.41 LANDING RAIL DETAIL, STAIR #2
SCALE: 1" = 1'- 0"
A0T055009-2B

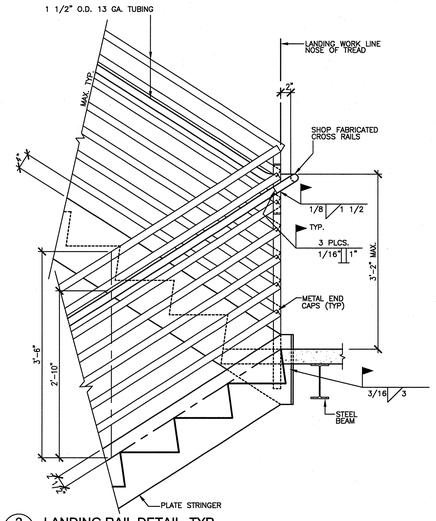


2 A9.60.41 LANDING RAIL DETAIL, TYP.
SCALE: 1" = 1'- 0"
A0T055008-2B

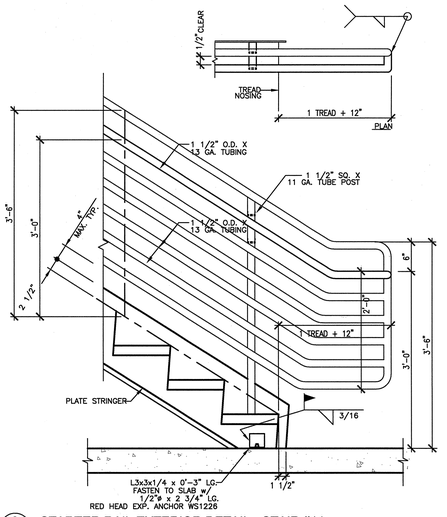


9 A9.60.41 STARTER RAIL EXTERIOR DETAIL - STAIR #11
SCALE: 1" = 1'- 0"
A0T055027-2B

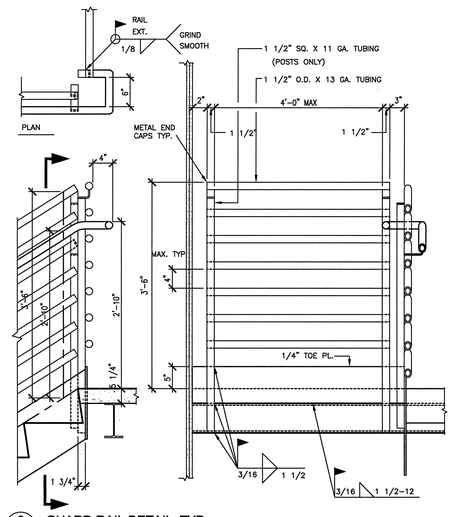


6 A9.69.41 GUARD RAIL DETAIL, TYP.
SCALE: 1" = 1'- 0"
A0T055015

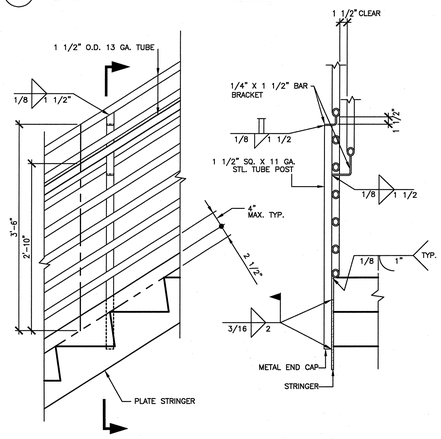


3 A9.60.41 INTERMEDIATE POST CONNECTION, TYP.
SCALE: 1" = 1'- 0"
A0T055006-2B

108031400-A8E-8600-A159


Knight/Jacobs Joint Venture
701 Scarboro Road, MS 8253
Oak Ridge, TN 37830
865-241-9433
fax 865-241-3400

KNIGHT
Knight Advanced Technology
540 West Randolph Street
Chicago, IL 60661


Oak Ridge National Laboratory
managed for the DEPARTMENT OF ENERGY under U.S. GOVERNMENT contract DE-AC05-00OR22725
UT-BATTELLE, LLC. • Oak Ridge, Tennessee

| | | |
|---|---|---|
| DSN | H. BAUMAN | 5/15/01 |
| DRW | J. O'BRIEN | 5/15/01 |
| CHK | E. DENSON | 5/15/01 |
| DEPT | | |
| PE | | 9/20/01 |
| PJ | | 9/14/01 |
| REQ | | |
| RPE | ROBERT L. BARNES, REGISTERED ARCHITECT, NO. 102104, STATE OF TENNESSEE | 9/20/01 |
| REV. 0 | DATE 5/15/01 | UTB 9/25/01 |

PROJECT NAME:
SPALLATION NEUTRON SOURCE
CENTRAL LAB AND OFFICE BUILDING
INTERIOR STAIR, RAILING DETAILS

| 1 | 48 | 49 | 50 | PLANT | BLDG | FL | SH. | OF | TYPE | CLASS |
|---|---|---|---|---|---|---|---|---|---|---|
| 3 | A | X | X | 8 | 8600 | | 1 | 1 | S | U |
| 51 | | 52 | | 53 | WBS | | | | | REV |
| NC | | NA | | | 1.8.3.14 | | A9.60.41 | | | 0 |

| REV | CHANGE TYPE | CHANGE CONTROL SYSTEM | CHANGE REQUEST NUMBER | DESCRIPTION | DSN | CHK | DEPT | DATE | PE | DATE | PJ | DATE | REQ | DATE | UTB | DATE | RPE | RPE NO | DATE | ST | CV | EC | EE | EM | IE | M | PD | SE | AR |
|---|---|---|---|---|---|---|---|---|---|---|---|---|---|---|---|---|---|---|---|---|---|---|---|---|---|---|---|---|---|
| 0 | | | | CERTIFIED FOR CONSTUCTION – MAY 15, 2001 | CF | ED | | | | 9/20/01 | | 9/20/01 | | | | 9/25/01 | RLB | 102104 | 5/15/01 | SC | AW | WRS | RL | WRS | BWJ | -- | WRS | -- | WAS |

REVISION OR ISSUE PURPOSE — REVISION APPROVALS — SQUAD CHECK — DRAWING APPROVALS


NO REPRESENTATION OR WARRANTY, EXPRESSED OR IMPLIED, IS MADE AS TO THE ACCURACY, COMPLETENESS OR USEFULNESS OF THE INFORMATION OR STATEMENTS CONTAINED IN THESE DRAWINGS, OR THAT THE USE OR DISCLOSURE OF ANY INFORMATION, APPARATUS, METHOD, OR PROCESS DISCLOSED IN THESE DRAWINGS MAY NOT INFRINGE PRIVATE RIGHTS OF OTHERS. NO LIABILITY IS ASSUMED WITH RESPECT TO THE USE OF, OR FOR DAMAGES RESULTING FROM THE USE OF ANY INFORMATION, APPARATUS, METHOD, OR PROCESS DISCLOSED IN THESE DRAWINGS. DRAWINGS MADE AVAILABLE FOR INFORMATION TO BIDDERS ARE NOT TO BE USED FOR OTHER PURPOSES AND ARE TO BE RETURNED UPON REQUEST OF THE FORWARDING CONTRACTOR.


NUMBER OF SECTION OR DETAIL
DRAWING ON WHICH SECTION OR DETAIL IS SHOWN OR TAKEN
SECTION AND DETAIL KEY

THIS DOCUMENT CONTROLLED BY
CHANGE CONTROL SYSTEM 4
ENGINEERING PROCEDURE SNS-ENG-0001