8	7	6	5	4	3	2	NEXT ASS'Y:	1 FINAL ASS'Y:

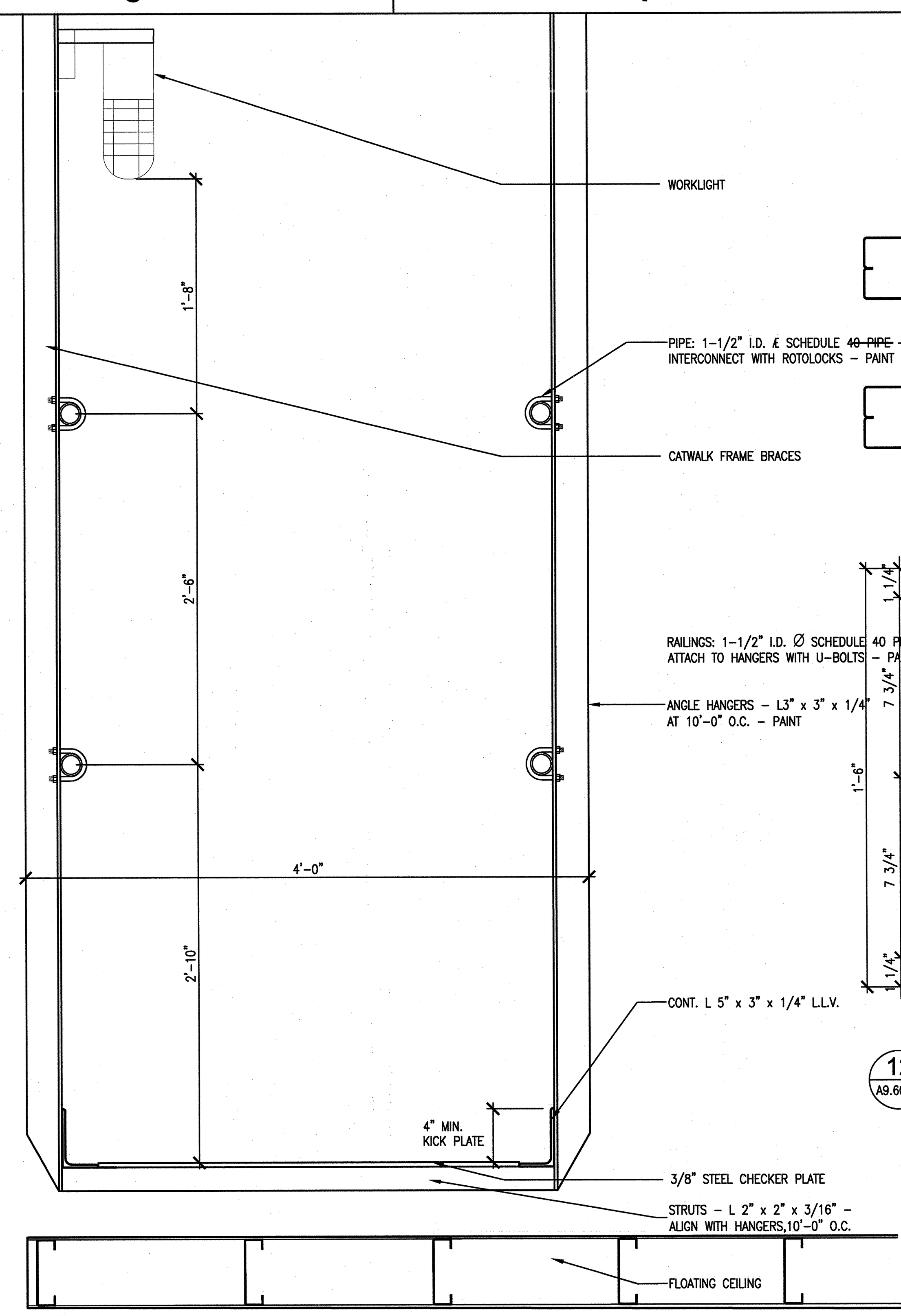

16 SECTION THROUGH CATWALK (A9.60.40)
SCALE: 1 1/2"=1'-0" ADT058002

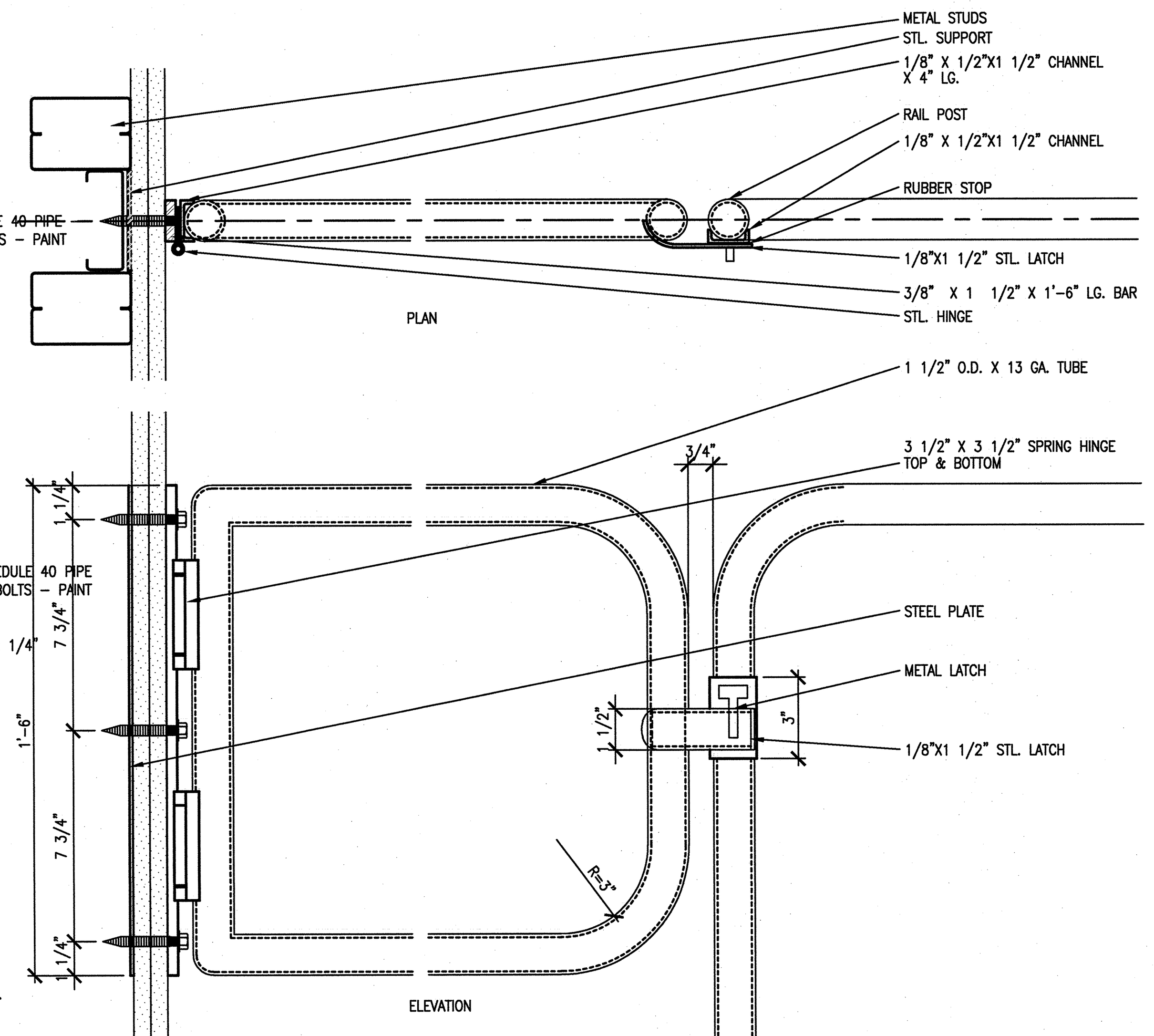

12 GATE @ WALL DETAIL (A9.60.40)
SCALE: 3"=1'-0" ADT055013-2B

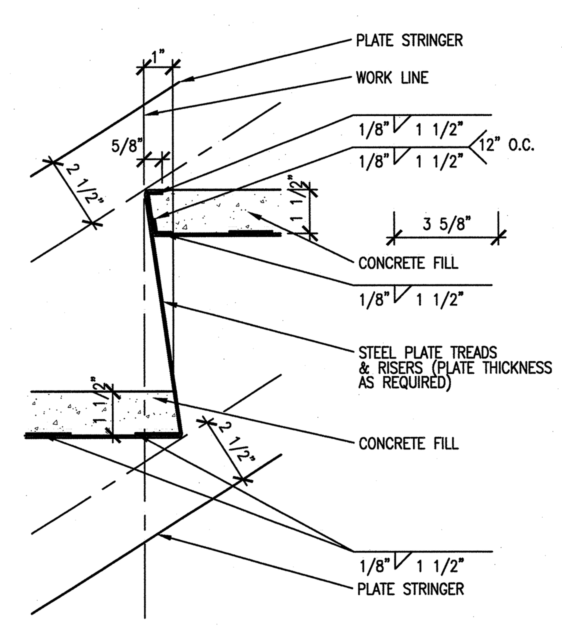

9 TYPICAL TREAD DETAIL (A9.60.40)
SCALE: 3"=1'-0" ADT055012-2B

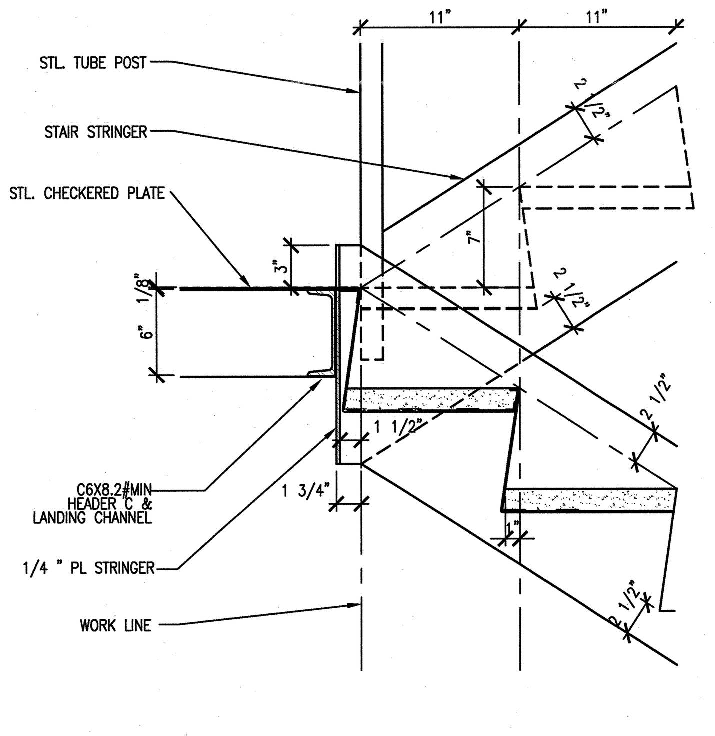

5 LANDING FRAME STRINGER CONNECTION (A9.60.40)
SCALE: 1 1/2" = 1'-0" ADT055022-2B

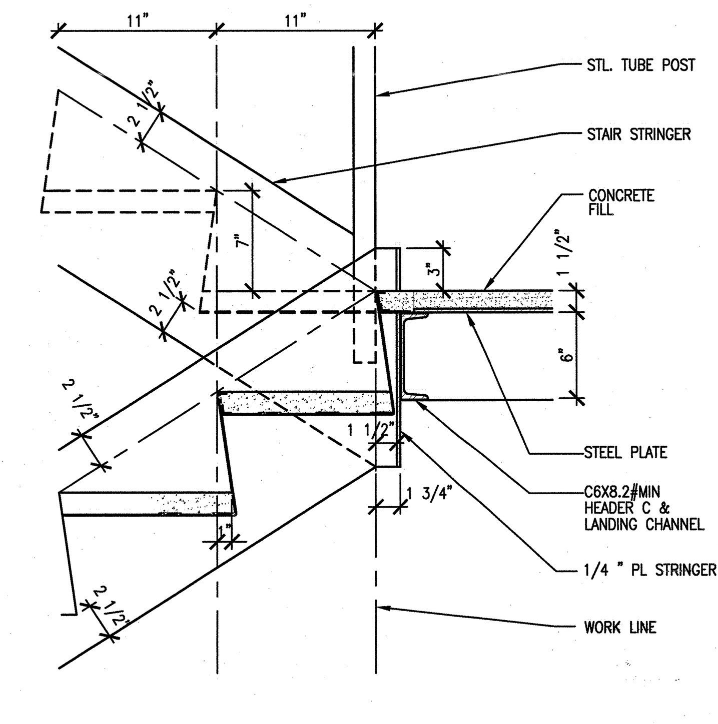

1 LANDING FRAME STRINGER CONNECTION (A9.60.40)
SCALE: 1 1/2" = 1'-0" ADT055004-2B

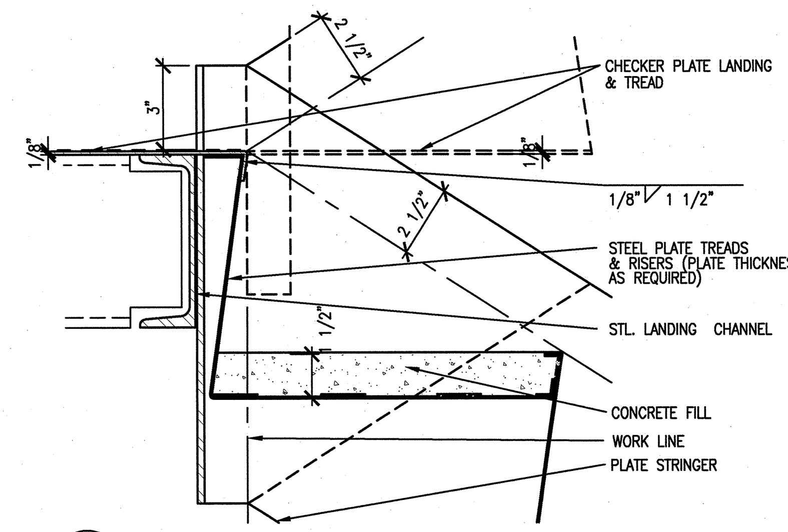

10 CHECKER PLATE LANDING DETAIL (A9.60.40)
SCALE: 3"=1'-0" ADT055124

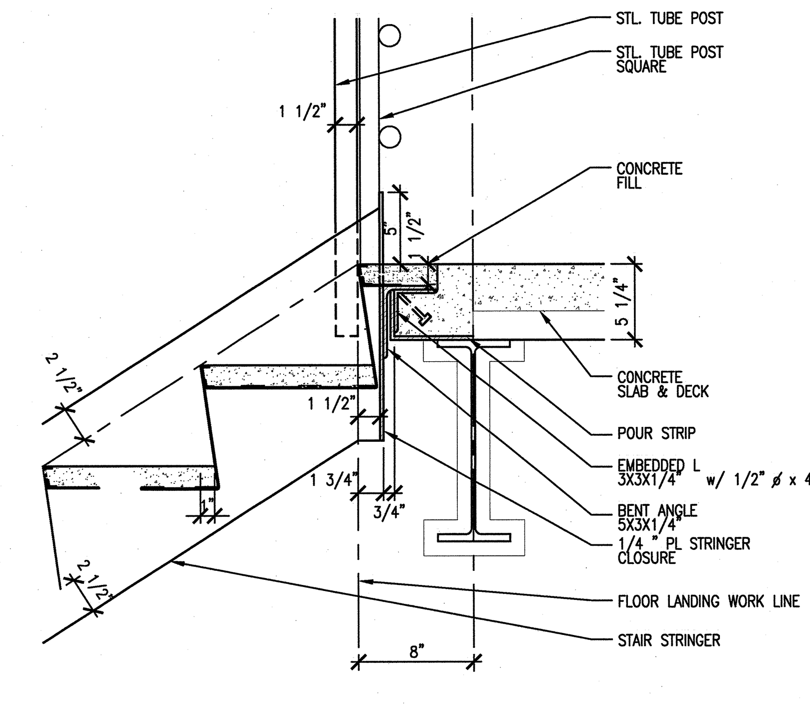

6 PLATE STRINGER CONNECTION (A9.60.40)
SCALE: 1 1/2" = 1'-0" ADT055021-2B

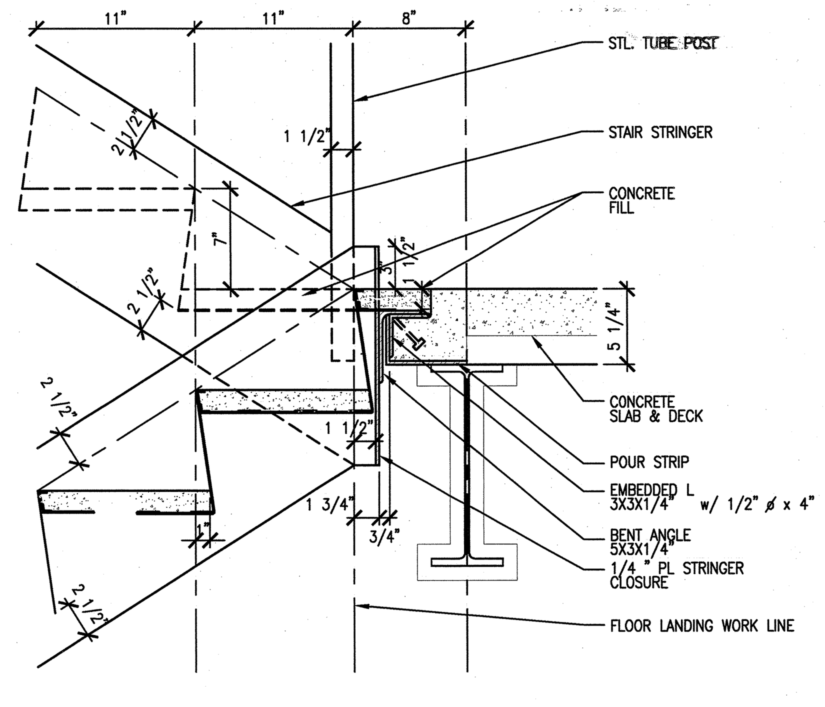

2 PLATE STRINGER CONNECTION (A9.60.40)
SCALE: 1 1/2" = 1'-0" ADT055003-2B

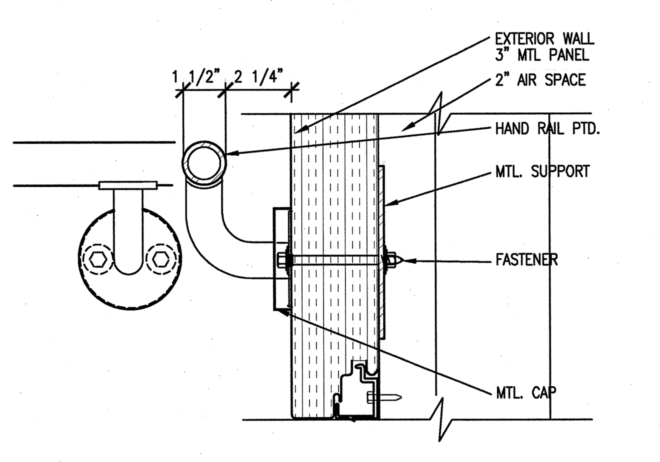

13 WALL RAIL SECTION DETAIL (A9.60.40)
3"=1'-0" SCALE: ADT055017-2B

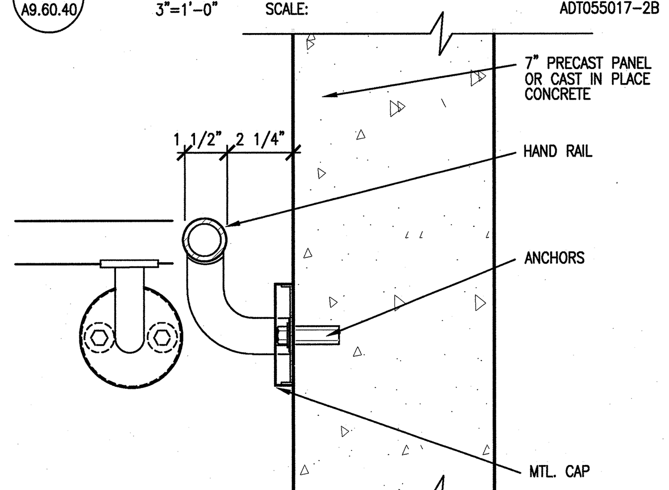

14 WALL RAIL SECTION DETAIL (A9.60.40)
SCALE: 3"=1'-0" ADT055017-2B

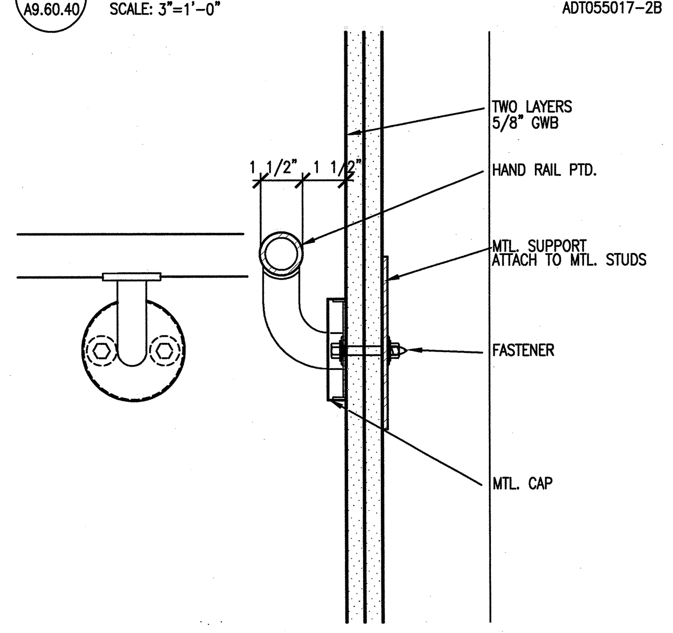

15 WALL RAIL SECTION DETAIL (A9.60.40)
SCALE: 3"=1'-0" ADT055017-2B

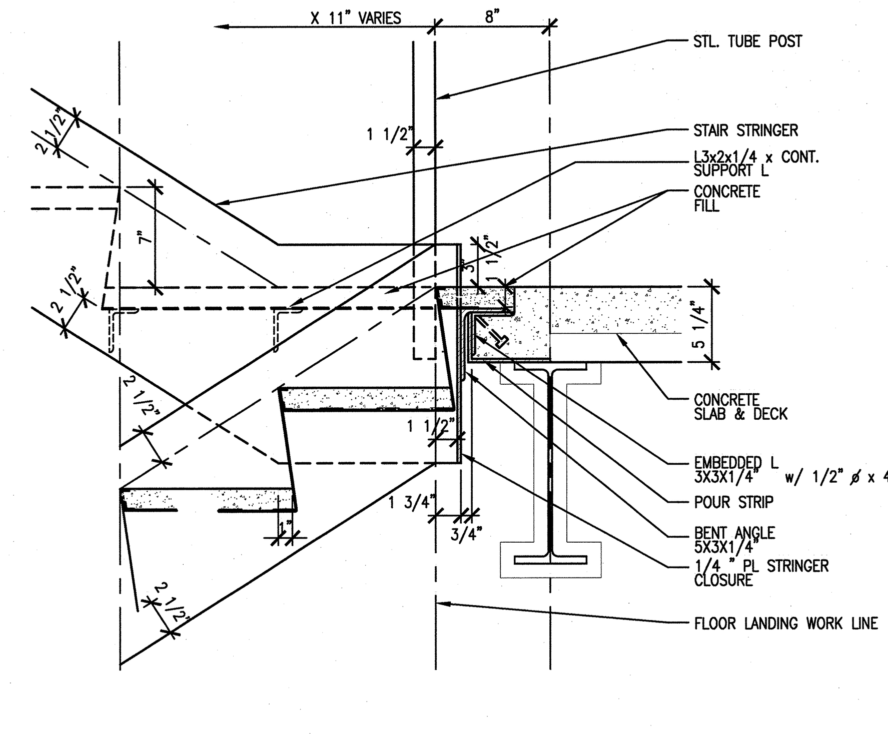

11 PLATE STRINGER CONNECTION (A9.60.40)
SCALE: 1 1/2" = 1'-0" ADT055029-2B

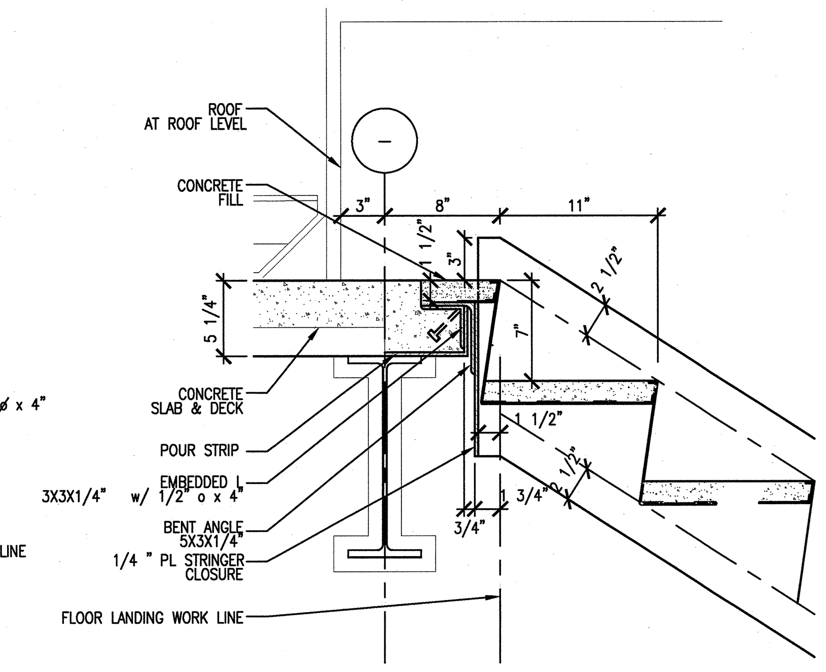

7 PLATE STRINGER CONNECTION (A9.60.40)
SCALE: 1 1/2" = 1'-0" ADT055025-2B

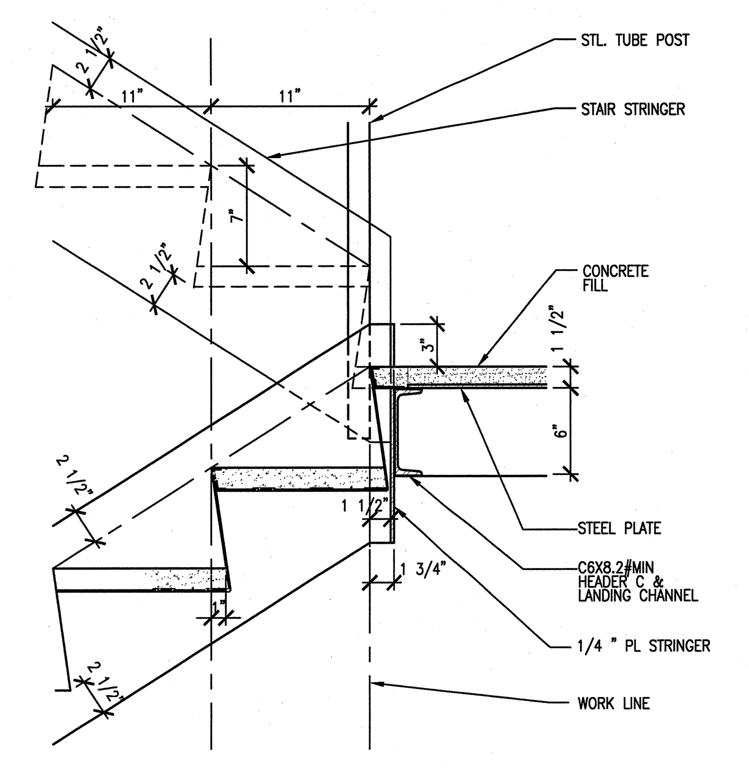

3 LANDING FRAME STRINGER CONNECTION (A9.60.40)
SCALE: 1 1/2" = 1'-0" ADT055018-2B

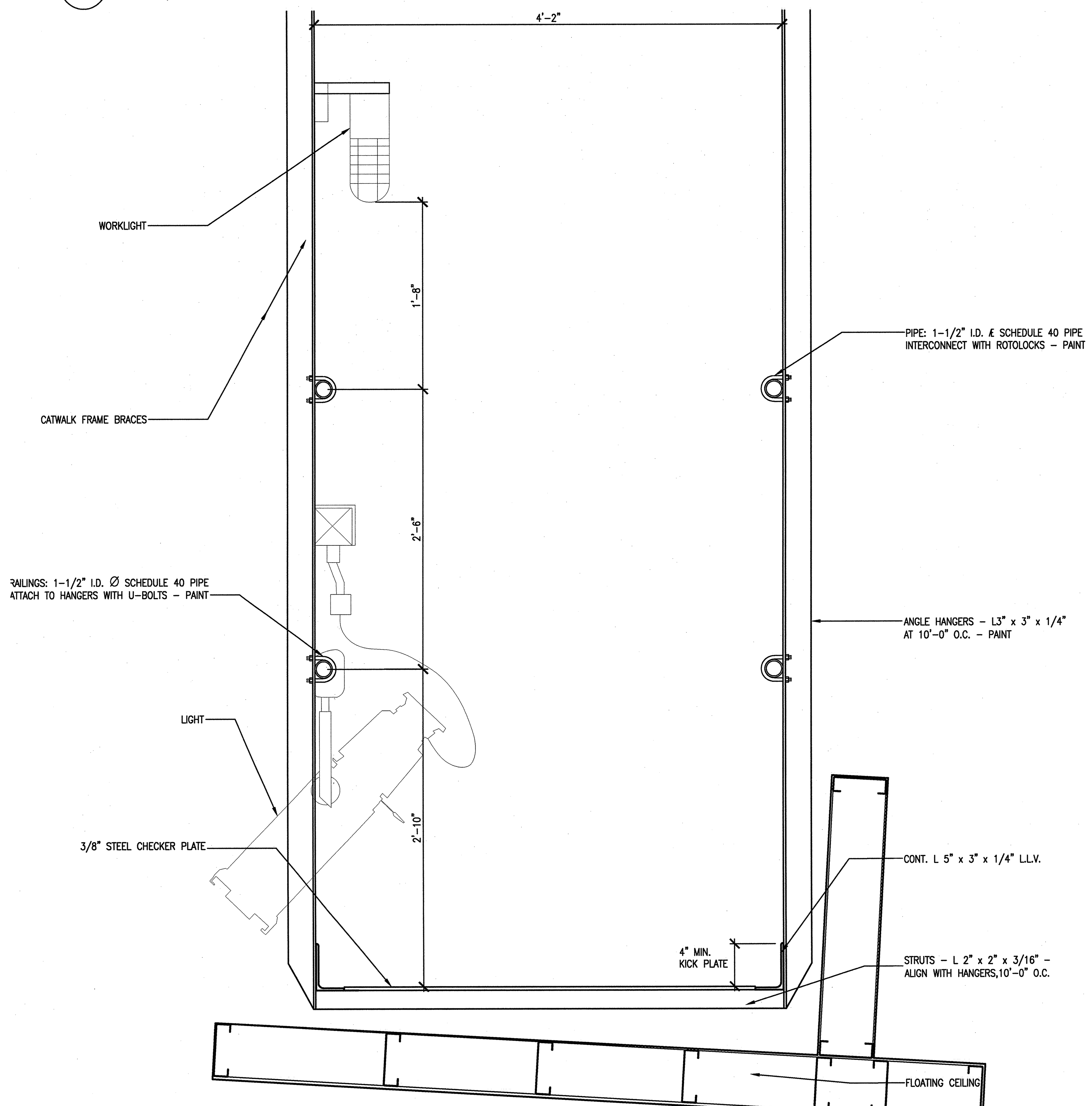

17 SECTION THROUGH CATWALK (A9.60.40)
SCALE: 1 1/2"=1'-0" ADT058002

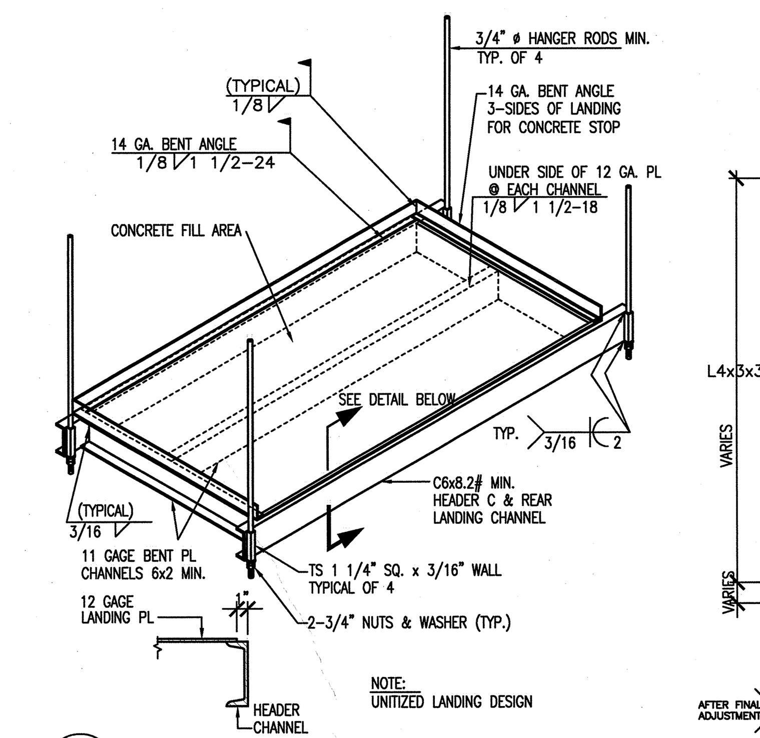

8A LANDING FRAME DETAIL (A9.60.40)
SCALE: N.T.S. ADT055001-2B

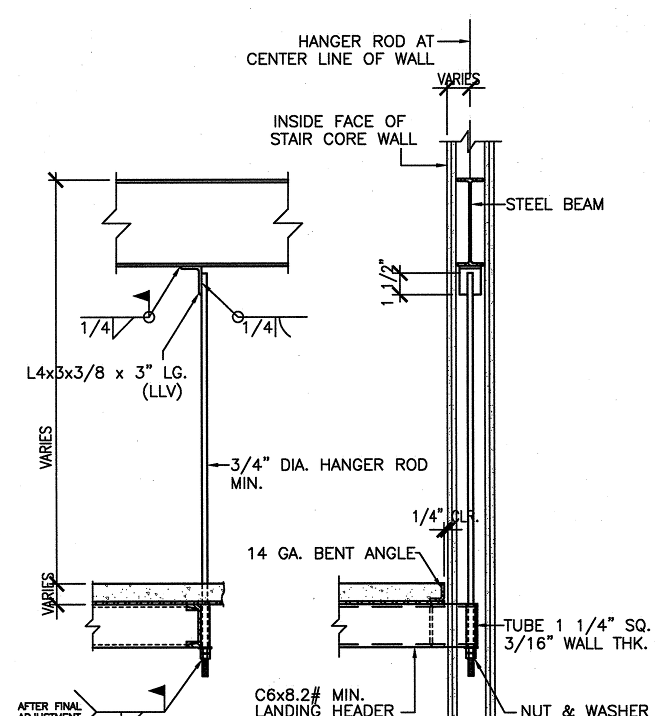

8 HANGER ROD DETAIL (A9.60.40)
SCALE: 1 1/2 " = 1'- 0" ADT055002-2B

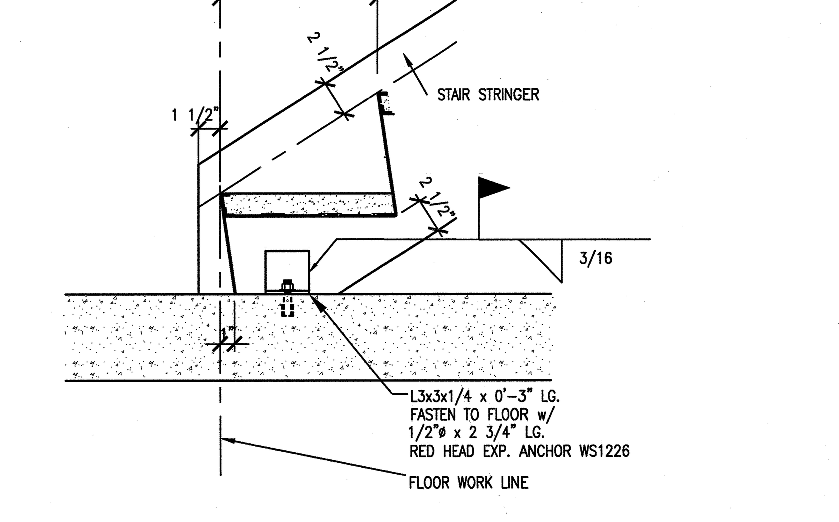

4 FLOOR SLAB STRINGER CONNECTION (A9.60.40)
SCALE: 1 1/2" = 1'-0" ADT055023-2B

108031400-A8E-8600-A158

Knight/Jacobs Joint Venture
701 Scarboro Road, MS 8253
Oak Ridge, TN 37830
865-241-9433
fax 865-241-3400

KNIGHT
Knight Advanced Technology
549 West Randolph Street
Chicago, IL 60661

UT-BATTELLE
Oak Ridge National Laboratory
managed for the DEPARTMENT OF ENERGY under U.S. GOVERNMENT contract DE-AC05-00OR22725
UT-BATTELLE, LLC, © Oak Ridge, Tennessee

PROJECT NAME:
SPALLATION NEUTRON SOURCE

CENTRAL LAB AND OFFICE BUILDING
INTERIOR STAIR, RAILING & CATWALK DETAILS

DSN	H. BAUMAN	5/15/01
DRW	J. O'BRIEN	5/15/01
CHK	E. DENSON	5/15/01
DEPT		
PE		9/20/01
PJ		9/21/01
REQ		

RPE
ROBERT L. BARNES REGISTERED ARCHITECT STATE OF TENNESSEE NO. 102104
5/15/01

REV. 0 DATE 5/15/01 UTB 9/25/01
DRAWING APPROVALS

1	48	49	50	PLANT	BLDG	FL	SH.	OF	TYPE	CLASS
3	A	X	X	8	8600		1	1	S	U
51		52	53		WBS					REV
NC		NA			1.8.3.14	A9.60.40				0

REV	CHANGE TYPE	CHANGE CONTROL SYSTEM	CHANGE REQUEST NUMBER	DESCRIPTION	DSN	CHK	DEPT	DATE	PE	DATE	PJ	DATE	REQ	DATE	UTB	DATE	RPE	RPE NO	DATE
0				CERTIFIED FOR CONSTUCTION – MAY 15, 2001	CF	ED				9/20/01		9/21/01				9/25/01	RLB	102104	5/15/01

REVISION OR ISSUE PURPOSE — REVISION APPROVALS

SC	AW	WRS	RL	WRS	BWJ	--	WRS	--	WAS
ST	CV	EC	EE	EM	IE	M	PD	SE	AR

SQUAD CHECK

NO REPRESENTATION OR WARRANTY, EXPRESSED OR IMPLIED, IS MADE AS TO THE ACCURACY, COMPLETENESS OR USEFULNESS OF THE INFORMATION OR STATEMENTS CONTAINED IN THESE DRAWINGS, OR THAT THE USE OR DISCLOSURE OF ANY INFORMATION, APPARATUS, METHOD, OR PROCESS DISCLOSED IN THESE DRAWINGS MAY NOT INFRINGE PRIVATE RIGHTS OF OTHERS. NO LIABILITY IS ASSUMED WITH RESPECT TO THE USE OF, OR FOR DAMAGES RESULTING FROM THE USE OF ANY INFORMATION, APPARATUS, METHOD, OR PROCESS DISCLOSED IN THESE DRAWINGS. DRAWINGS MADE AVAILABLE FOR INFORMATION TO BIDDER ARE NOT TO BE USED FOR OTHER PURPOSES AND ARE TO BE RETURNED UPON REQUEST OF THE FORWARDING CONTRACTOR.

NUMBER OF SECTION OR DETAIL — DRAWING ON WHICH SECTION OR DETAIL IS SHOWN OR TAKEN
SECTION AND DETAIL KEY

THIS DOCUMENT CONTROLLED BY
CHANGE CONTROL SYSTEM 4
ENGINEERING PROCEDURE SNS-ENG-G001

AutoCAD

Date: 05/12/2001 Time: 22:31:55
Username: WANGW
CHI-F_VOL2:PROJECTS\7000\700_CADD\TASK_2B\740_PLOT\A9-60-40.DWG

8	7	6	5	4	3	2	1