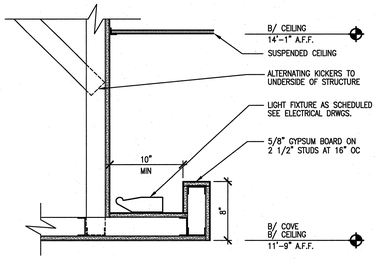

11 A9.40.40 DETAIL- CEILING COVE
SCALE: 1 1/2"=1'-0" ADT091002-2B

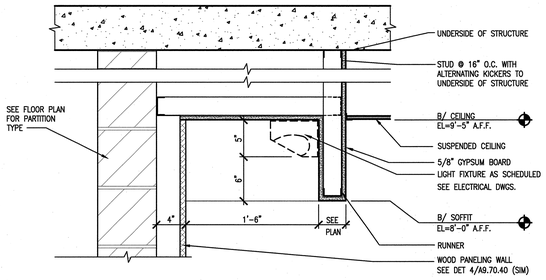

7 A9.40.40 COVE DETAIL - AUDITORIUM VESTIBULE
SCALE: 1 1/2"=1'-0" ADT091013-2B

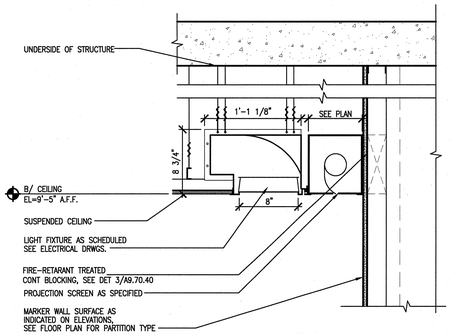

3 A9.40.40 CEILING DETAIL - CONFERENCE ROOMS
SCALE: 1 1/2"=1'-0" ADT091013-2B

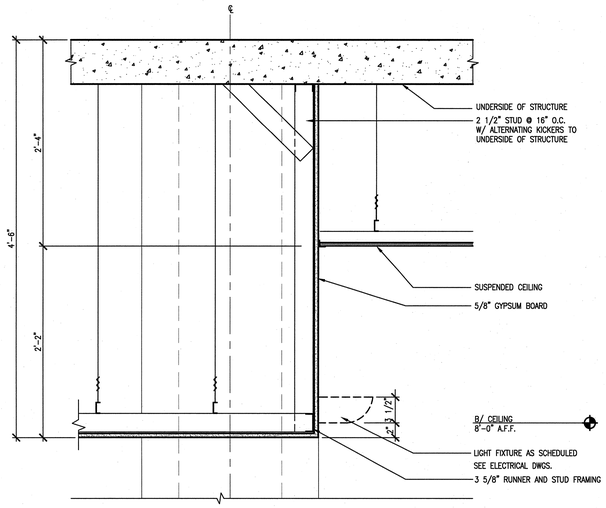

1 A9.40.40 SOFFIT DETAIL - LOBBY
SCALE: 1 1/2"=1'-0" ADT091013-2B

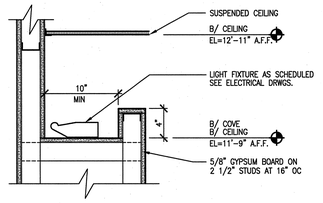

12 A9.40.40 DETAIL- CEILING COVE
SCALE: 1 1/2"=1'-0" ADT091003-2B

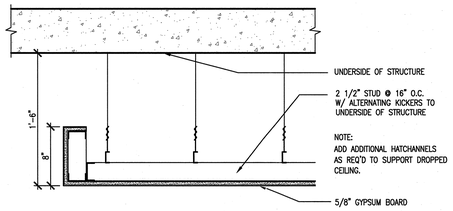

8 A9.40.40 SOFFIT DETAIL - LOBBY
SCALE: 1 1/2"=1'-0" ADT091013-2B

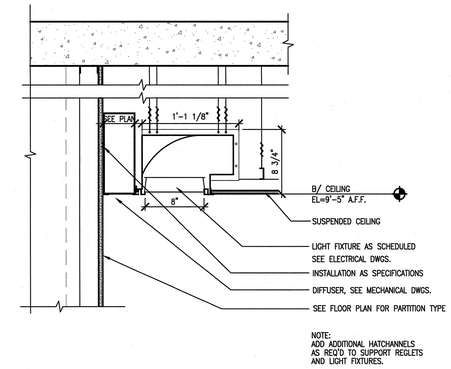

4 A9.40.40 CEILING DETAIL - CONFERENCE ROOMS
SCALE: 1 1/2"=1'-0"

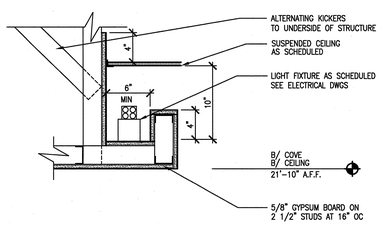

13 A9.40.40 DETAIL- CEILING COVE AT CONTROL ROOM
SCALE: 1 1/2"=1'-0" ADT091007-2B

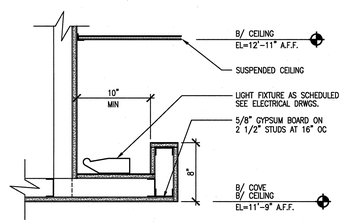

9 A9.40.40 DETAIL- CEILING COVE
SCALE: 1 1/2"=1'-0" ADT091004-2B

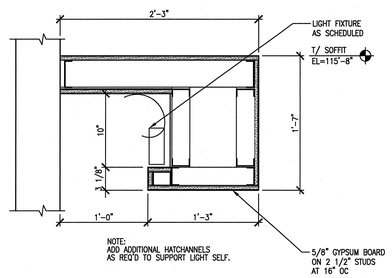

5 A5.10.40 SOFFIT DETAIL - CONTROL ROOM
SCALE: 1 1/2"=1'-0" ADT091012-2B

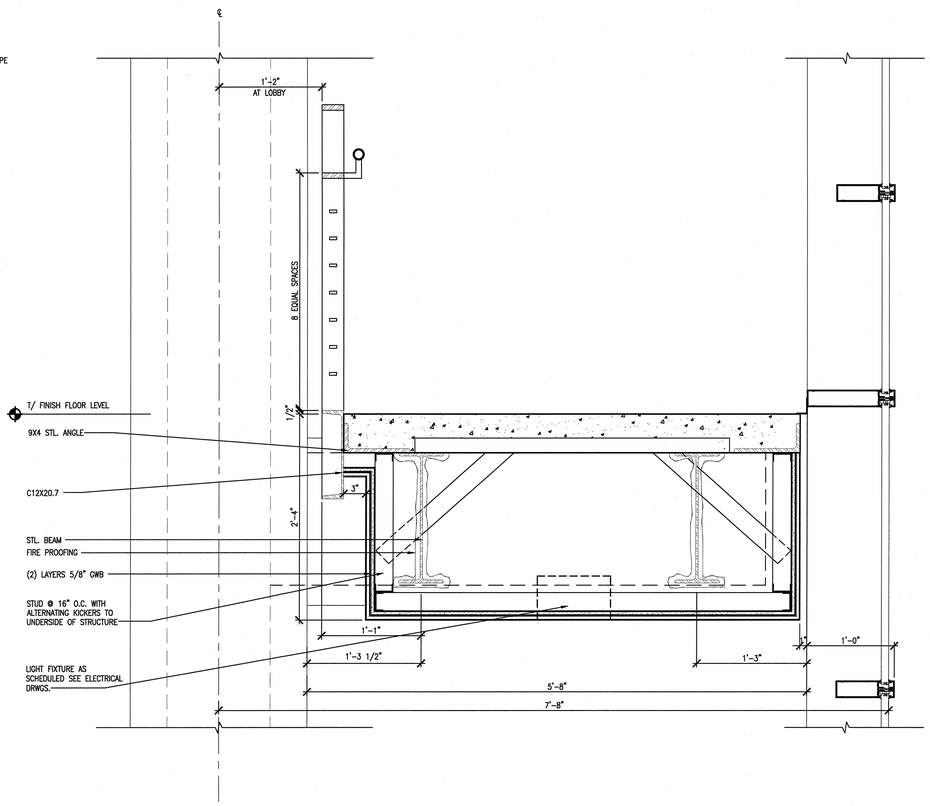

2 A9.40.40 TYPICAL GYPSUM BOARD CEILING DETAIL - LOBBY
SCALE: 1 1/2"=1'-0" ADT091013-2B

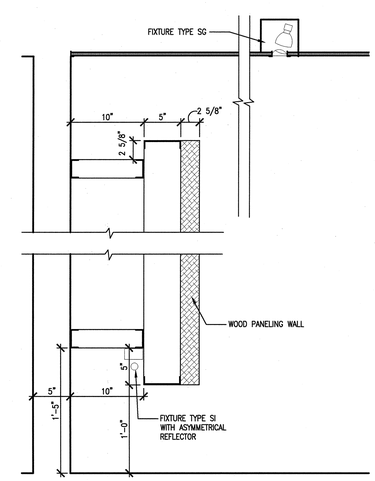

14 A9.40.40 AUDITORIUM COVE LIGHTING
SCALE: 1 1/2"=1'-0" ADT091013-2B

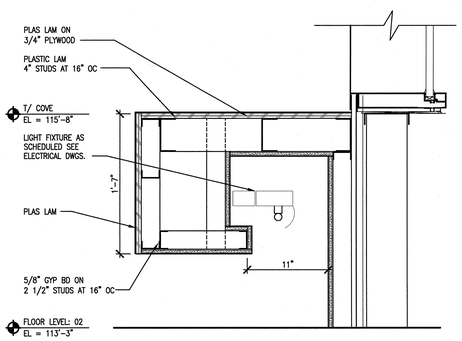

10 A9.40.40 DETAIL- CONTROL ROOM OBSERVATION COVE
SCALE: 1 1/2"=1'-0" ADT091005-2B

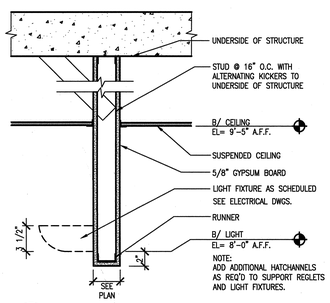

6 A9.40.40 TYPICAL CORRIDOR HEADER DETAIL
SCALE: 1 1/2"=1'-0" ADT091013-2B

1' 9" 6" 3" 0 1' 2'
SCALE: 1-1/2" = 1'-0"

108031400-A8E-8600-A176

Knight Jacobs
Knight/Jacobs Joint Venture
701 Scarboro Road, MS 8253
Oak Ridge, TN 37830
865-241-9433
fax 865-241-3400

KNIGHT
Knight Advanced Technology
549 West Randolph Street
Chicago, IL 60661

UT-BATTELLE
Oak Ridge National Laboratory
managed for the DEPARTMENT OF ENERGY under
U.S. GOVERNMENT contract DE-AC05-00OR22725
UT-BATTELLE, LLC. ■ Oak Ridge, Tennessee

PROJECT NAME:
SPALLATION NEUTRON SOURCE
CENTRAL LAB AND OFFICE BUILDING
CEILING DETAILS

RPE		
DSN	H. BAUMAN	5/15/01
DRW	I-W WANG	5/15/01
CHK	E. DENSON	5/15/01
DEPT		
PE		9/12/01
PJ		9/12/01
REQ		
REV. 0	DATE 5/15/01	9/12/01
DRAWING APPROVALS		

ROBERT L. BARNES REGISTERED ARCHITECT NO. 102310 STATE OF TENNESSEE 5/15/01

1	48	49	50	PLANT	BLDG	FL	SH.	OF	TYPE	CLASS
3	A	X	X	8	8600		1	1	S	U
51		52		53	WBS		A9.40.40			REV
NC		NA			1.8.3.14					0

REV	CHANGE TYPE	CHANGE CONTROL SYSTEM	CHANGE REQUEST NUMBER	DESCRIPTION	CF	ED	DATE	PE	DATE	PJ	DATE	REQ	DATE	UTB	DATE	RPE	RPE NO	DATE	SC	AW	WRS	RL	WRS	EWJ	--	WRS	--	WAS
0				CERTIFIED FOR CONSTUCTION – MAY 15, 2001												RLB	102104	5/15/01										
				REVISION OR ISSUE PURPOSE				REVISION APPROVALS											ST	CV	EC	EE	EM	IE	M	PD	SE	AR
																			SQUAD CHECK									

NO REPRESENTATION OR WARRANTY, EXPRESSED OR IMPLIED, IS MADE AS TO THE ACCURACY, COMPLETENESS OR USEFULNESS OF THE INFORMATION OR STATEMENTS CONTAINED IN THESE DRAWINGS, OR THAT THE USE OR DISCLOSURE OF ANY INFORMATION, APPARATUS, METHOD, OR PROCESS DISCLOSED IN THESE DRAWINGS MAY NOT INFRINGE PRIVATE RIGHTS OF OTHERS. NO LIABILITY IS ASSUMED WITH RESPECT TO THE USE OF, OR FOR DAMAGES RESULTING FROM THE USE OF ANY INFORMATION, APPARATUS, METHOD, OR PROCESS DISCLOSED IN THESE DRAWINGS. DRAWINGS MADE AVAILABLE FOR INFORMATION TO BIDDER ARE NOT TO BE USED FOR OTHER PURPOSES AND ARE TO BE RETURNED UPON REQUEST OF THE FORWARDING CONTRACTOR.

NUMBER OF SECTION OR DETAIL
DRAWING ON WHICH SECTION OR DETAIL IS SHOWN OR TAKEN
SECTION AND DETAIL KEY

THIS DOCUMENT CONTROLLED BY
CHANGE CONTROL SYSTEM 4
ENGINEERING PROCEDURE SNS-ENG-G001

Date: 04/26/2001 Time: 16:34:10
Username: BRNGW
Dgn-C:\MLS\PROJECTS\7000\700_CAD\7A06_2B\740_PLOT\A9-40-40.DWG

AutoCAD