8 | 7 | 6 | 5 | 4 | 3 | 2 | NEXT ASS'Y | 1 FINAL ASS'Y

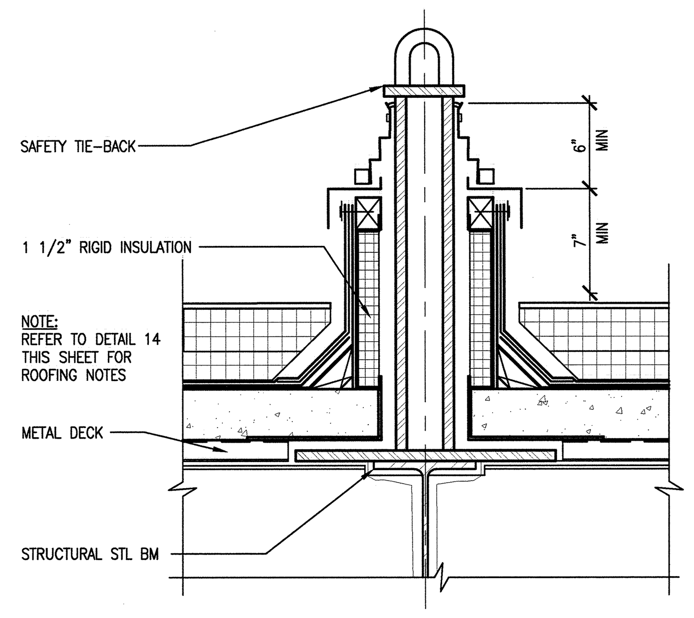

50 DETAIL - SAFETY TIE-BACK
A2.04.63 SCALE: 1 1/2"=1'-0" ADT077006-2B

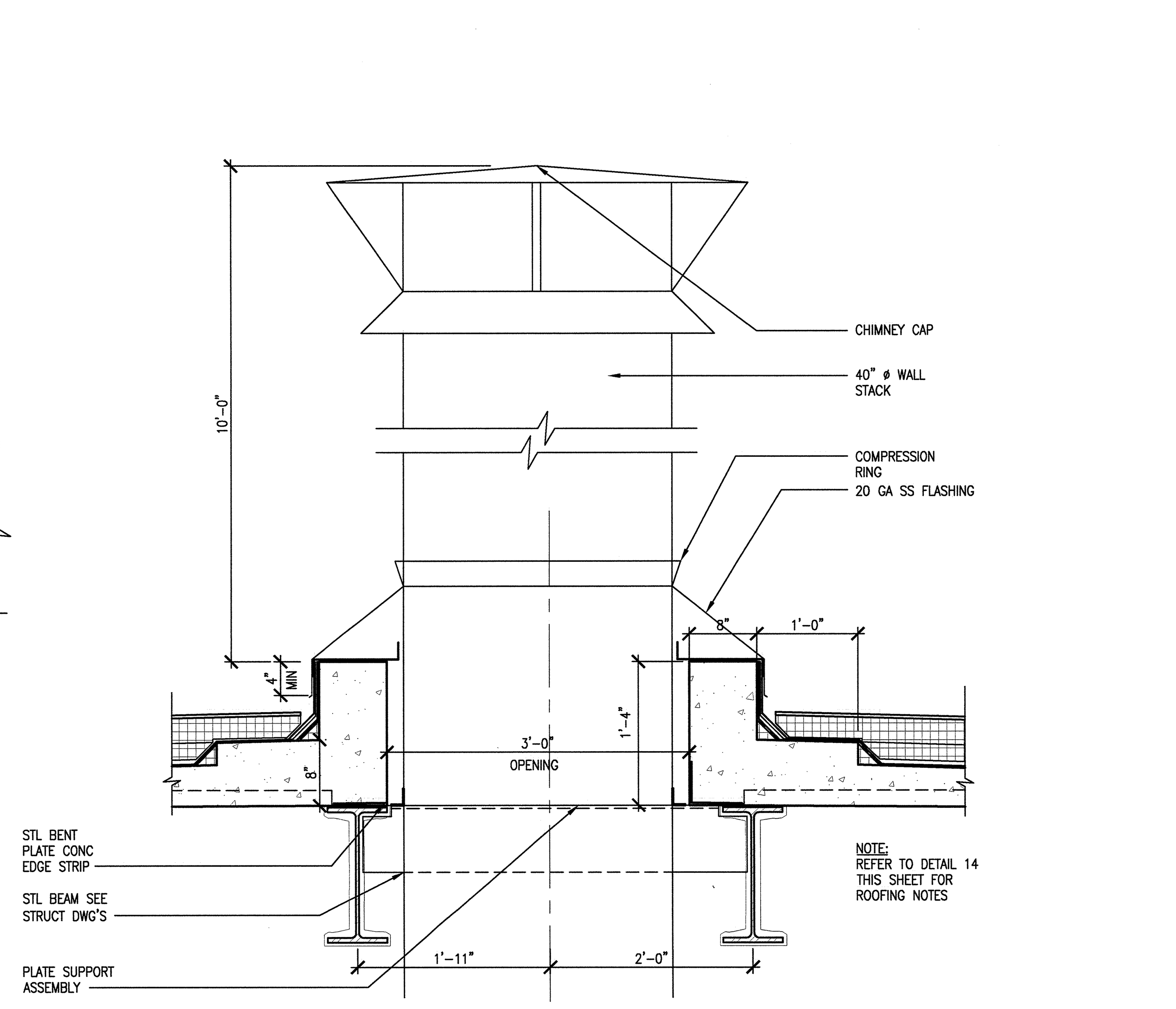

43 SECTION/ELEVATION OF BOILER STACK
A2.05.63 SCALE: 1"=1'-0" ADT075002-2B

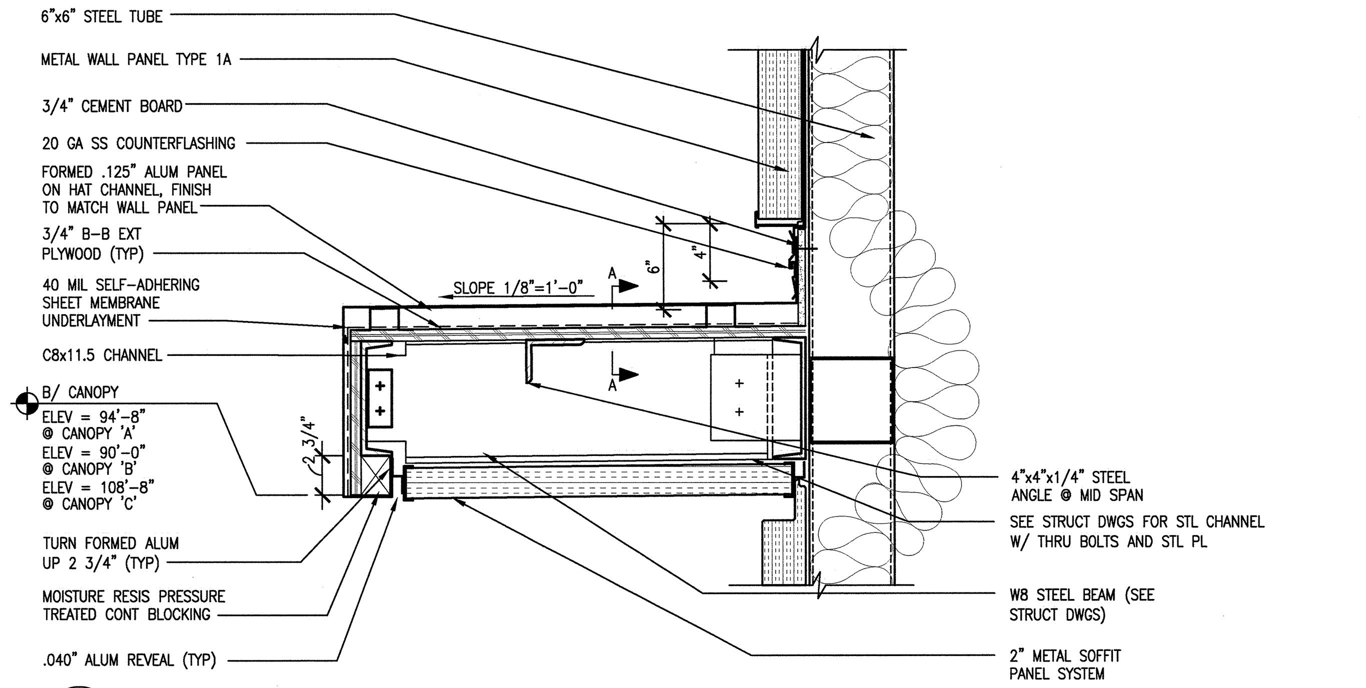

26 DETAIL - CANOPY @ METAL PANEL TYPE I
A2.01.62 SCALE: 1 1/2"=1'-0" ADT077004-2B

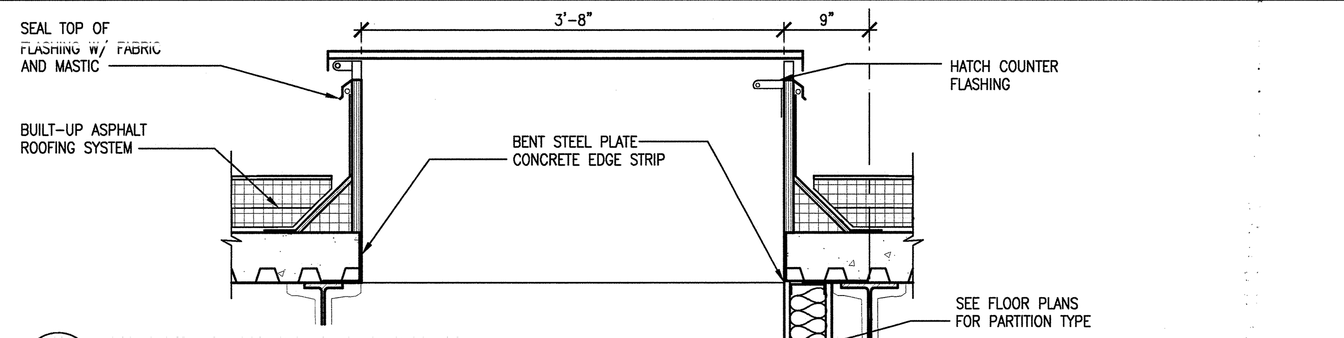

9 DETAIL-ROOF SCUTTLE CURB
A5.30.42 SCALE: 1"=1'-0" ADT077010-2B

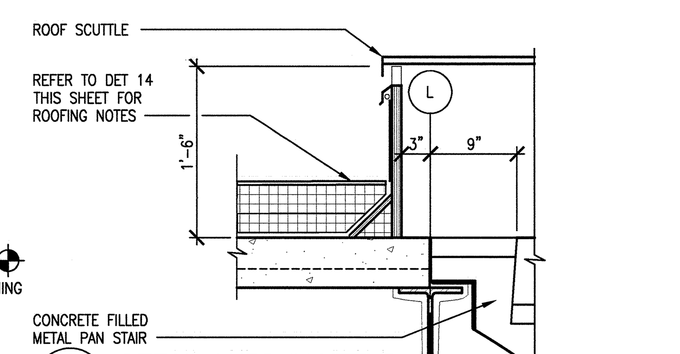

2 DETAIL-CURB SCUTTLE
A5.30.42 SCALE: 1"=1'-0" ADT077100-2B

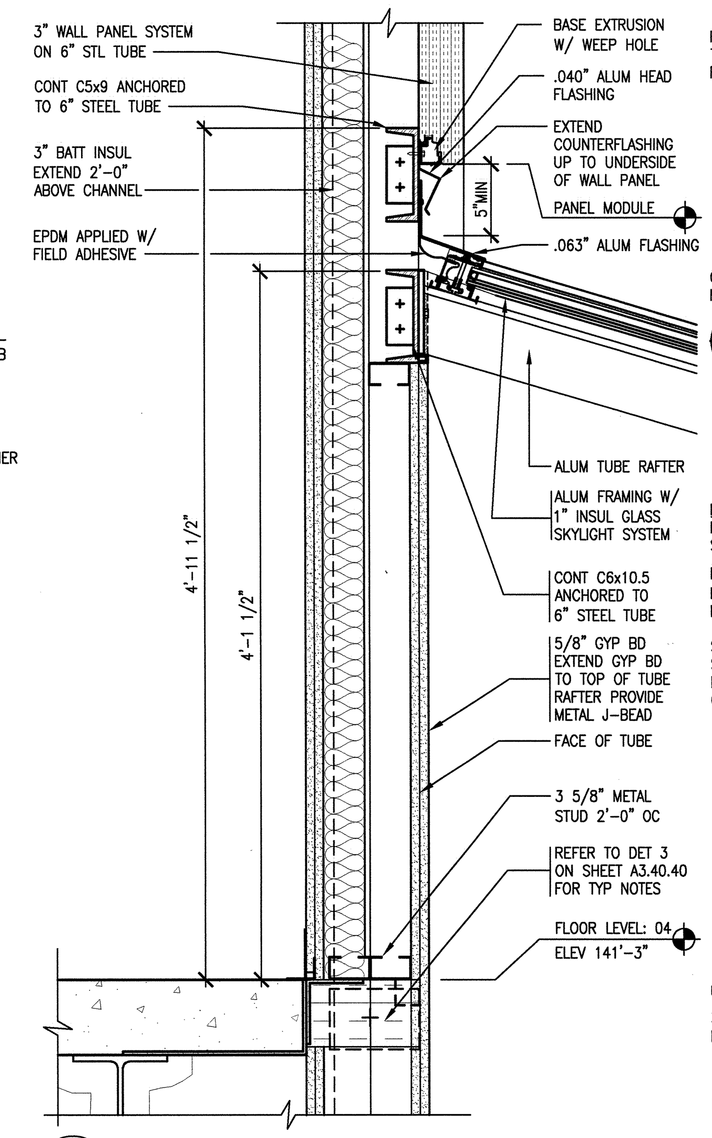

12 DETAIL - SKYLIGHT @ SILL
A3.40.43 SCALE: 1 1/2"=1'-0" ADT078003-2B

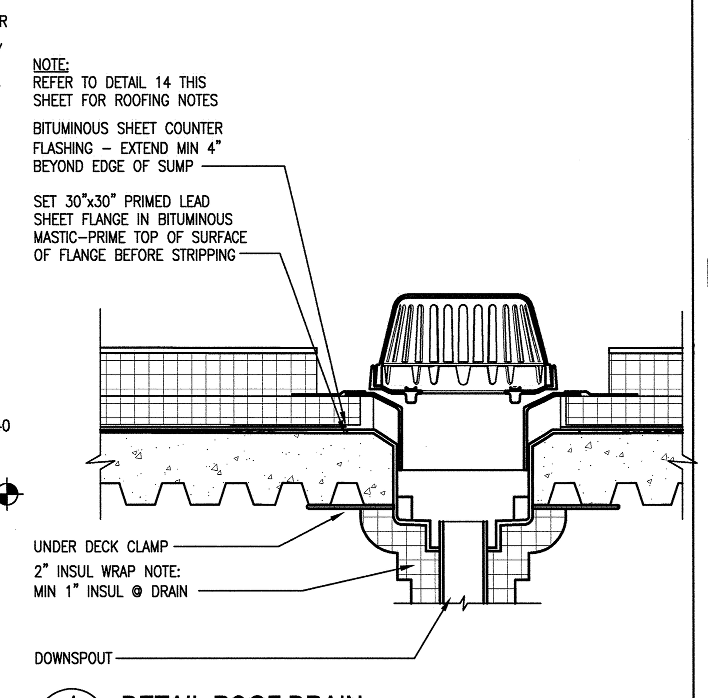

4 DETAIL-ROOF DRAIN
A2.03.41 SCALE: 1 1/2"=1'-0" ADT077007-2B

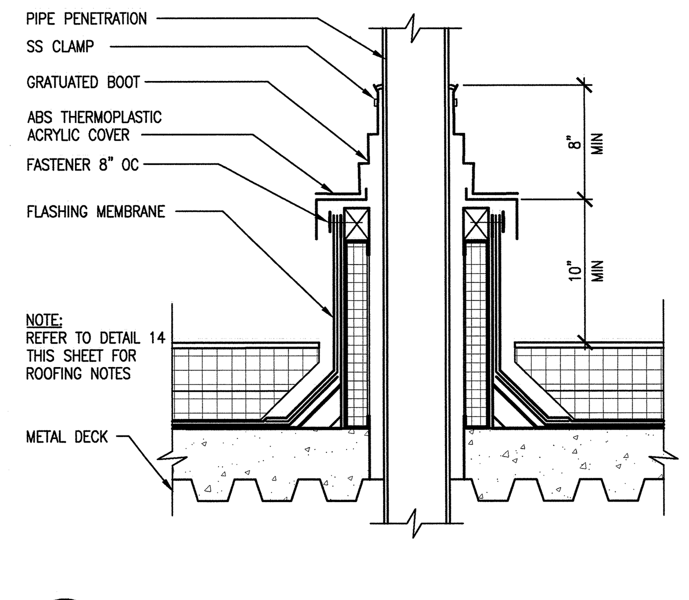

52 DETAIL - PIPE CURB
A2.05.63 SCALE: 1 1/2"=1'-0" ADT077008-2B

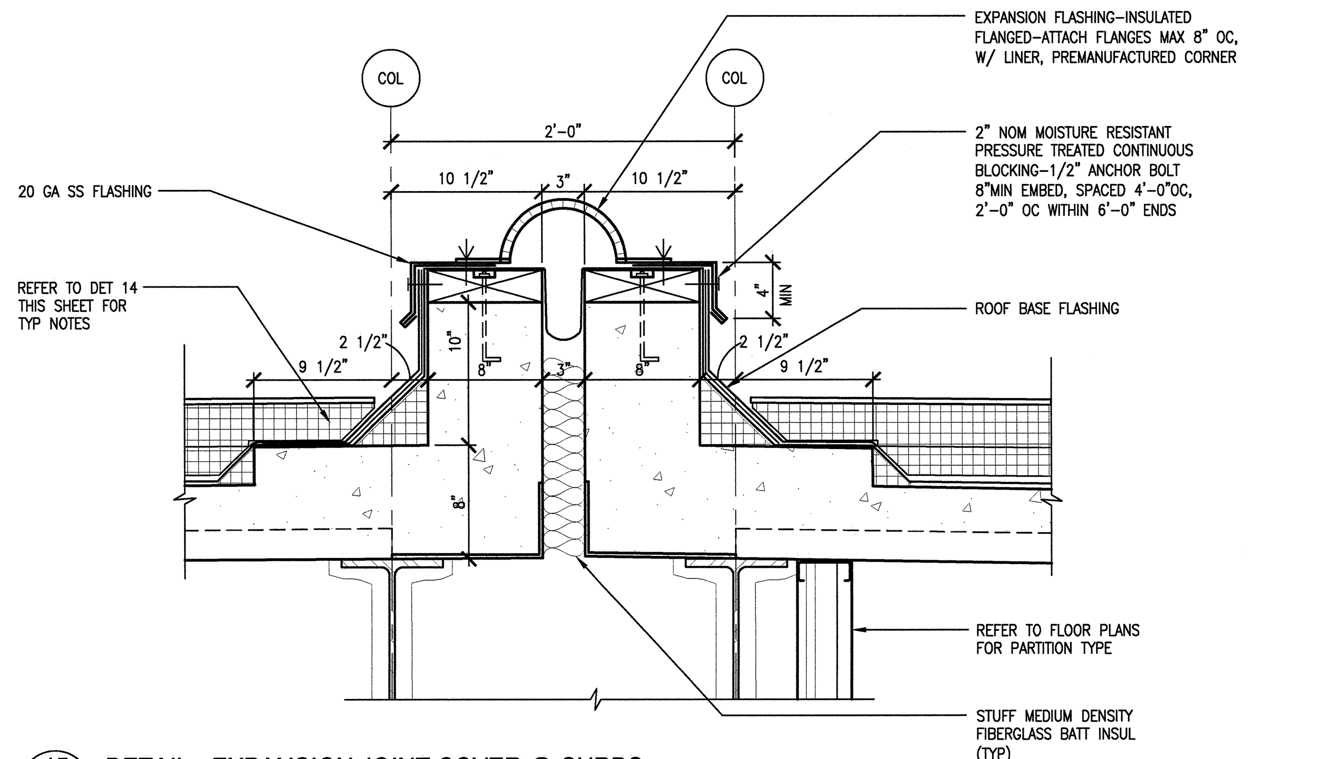

45 DETAIL - EXPANSION JOINT COVER @ CURBS
A3.40.42 SCALE: 1 1/2"=1'-0" ADT077011-2B

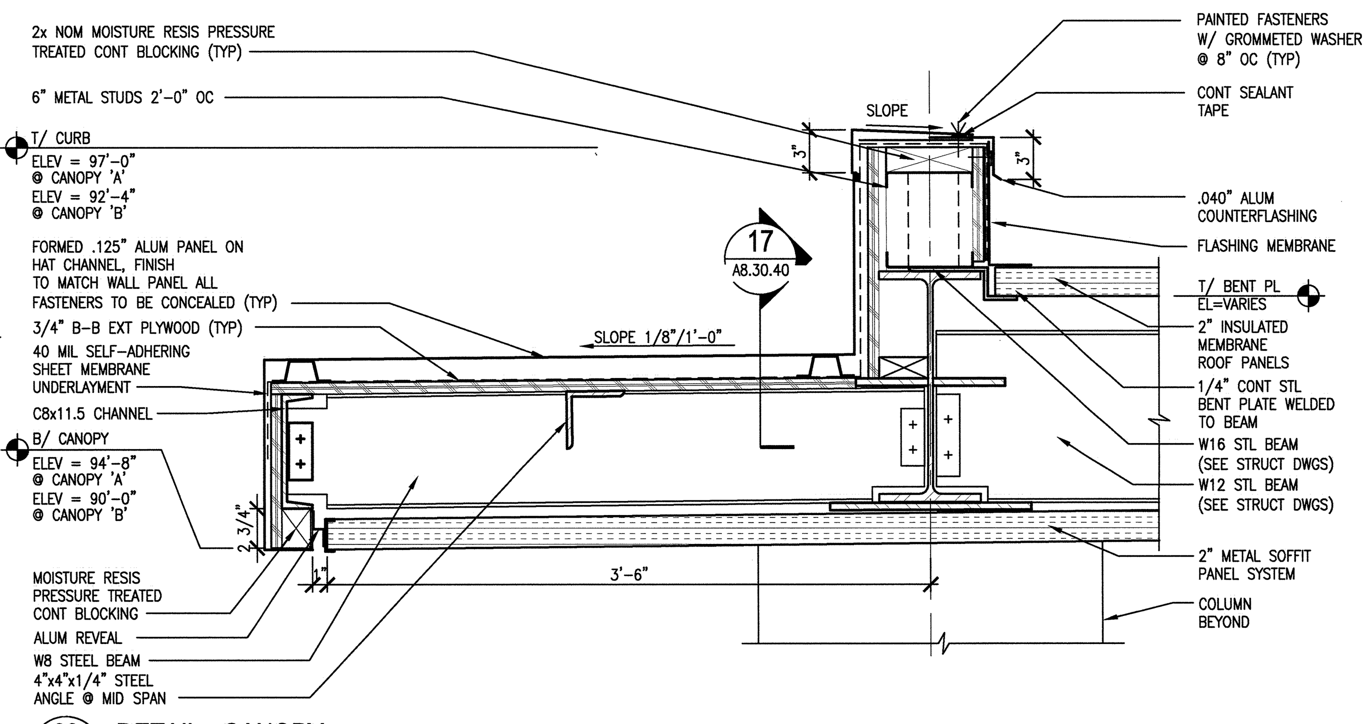

28 DETAIL - CANOPY
A2.01.62 SCALE: 1 1/2"=1'-0" ADT077002-2B

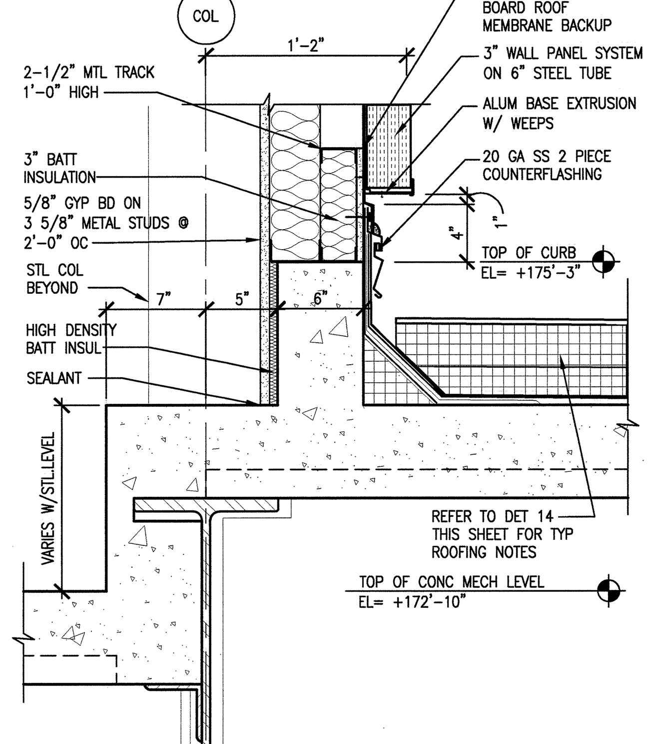

54 DETAIL- CURB WALL PANEL@PENT HOUSE
A5.30.48 SCALE: 1 1/2"=1'-0" ADT077013-2B

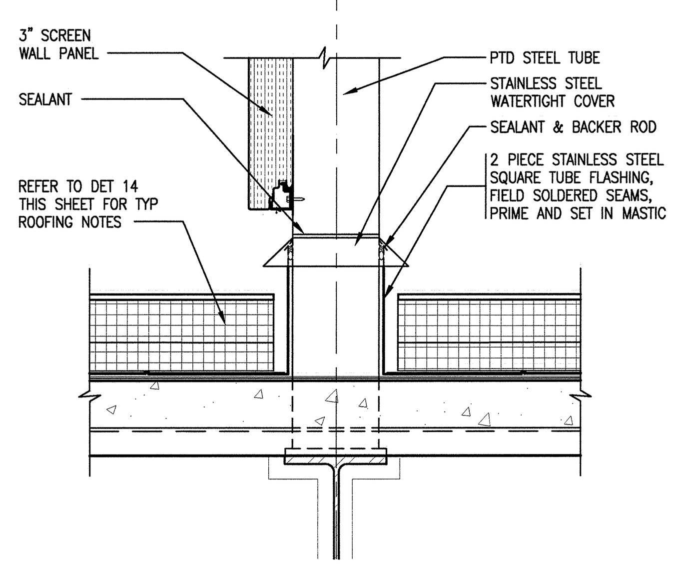

47 DETAIL - FLASHING @ SCREEN WALL TUBES
A2.06.61 SCALE: 1 1/2"=1'-0" ADT077014-2B

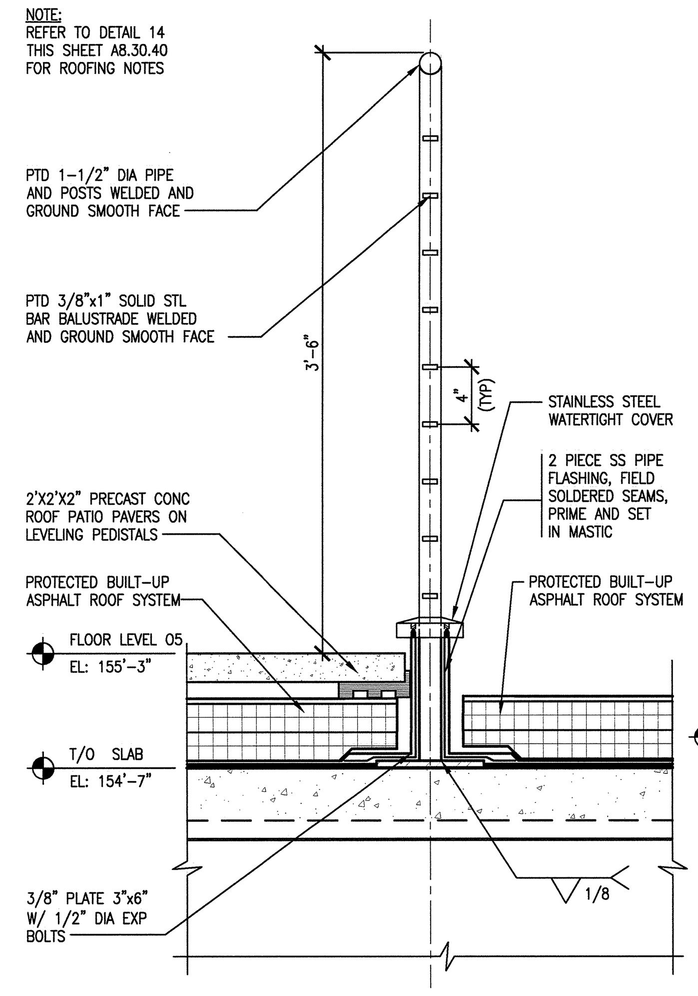

40 DETAIL - GUARDRAIL @ ROOF
A3.40.41 SCALE: 1 1/2"=1'-0" ADT077015-2B

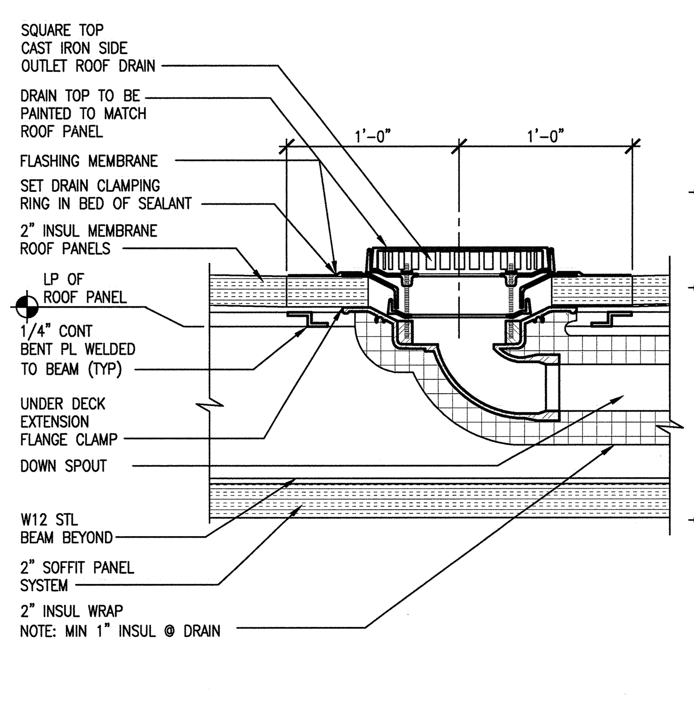

30 DETAIL - CANOPY ROOF DRAIN
A2.01.62 SCALE: 1 1/2"=1'-0" ADT075001-2B

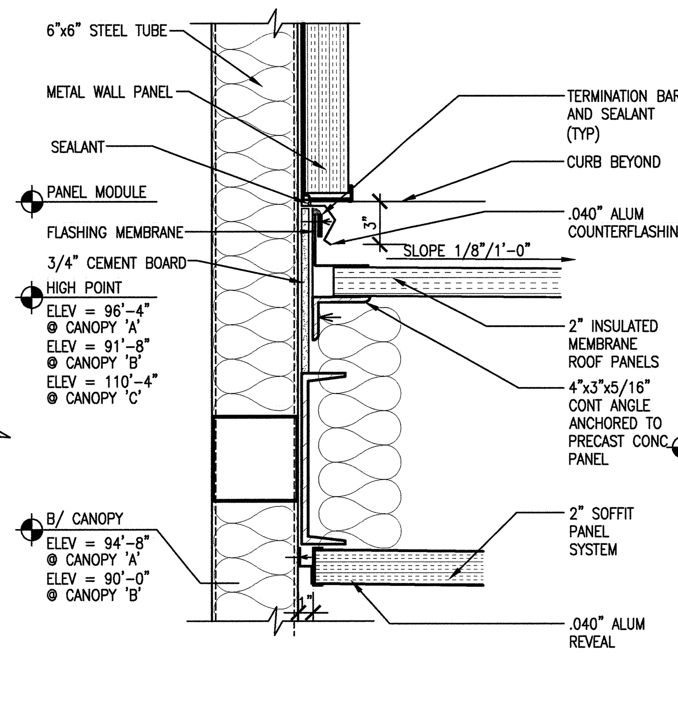

22 DETAIL - CANOPY @ METAL PANEL WALL
A2.01.62 SCALE: 1 1/2"=1'-0" ADT077003-2B

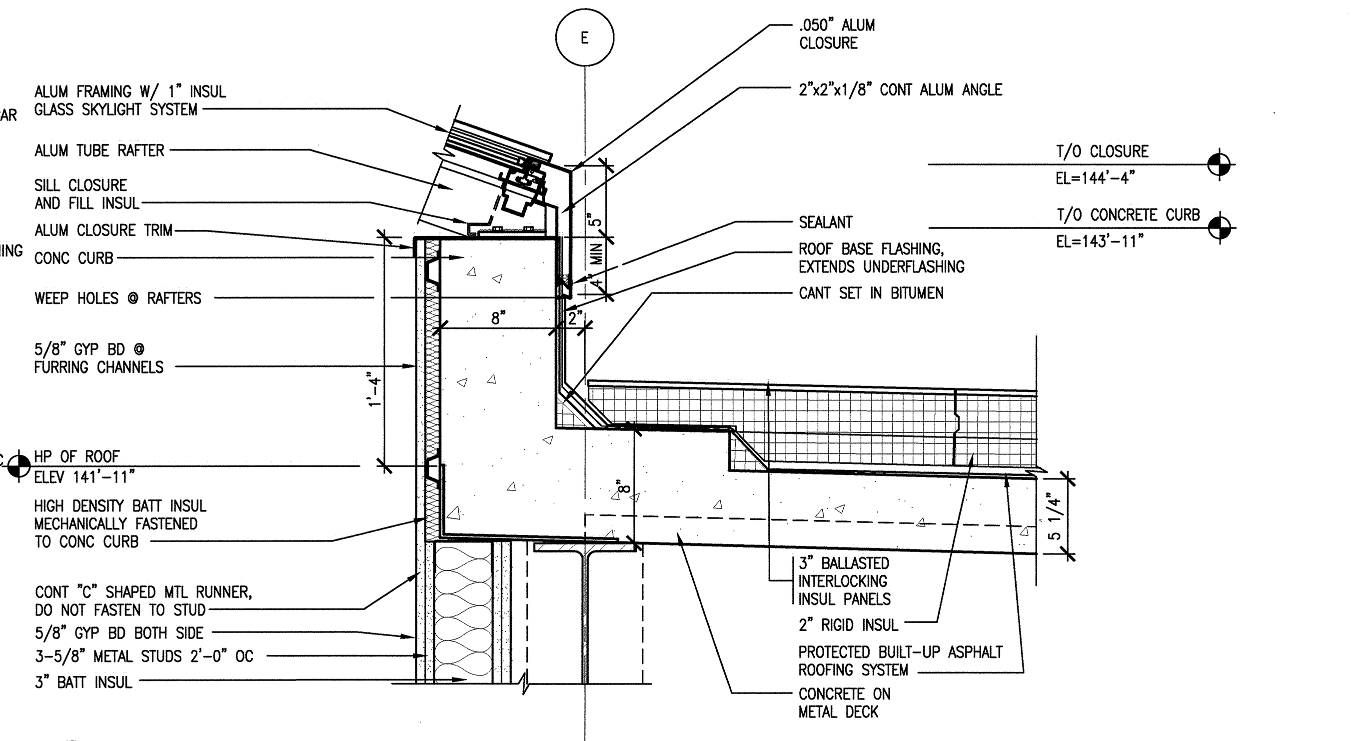

14 DETAIL - SKYLIGHT @ SILL
A3.40.43 SCALE: 1 1/2"=1'-0" ADT078002-2B

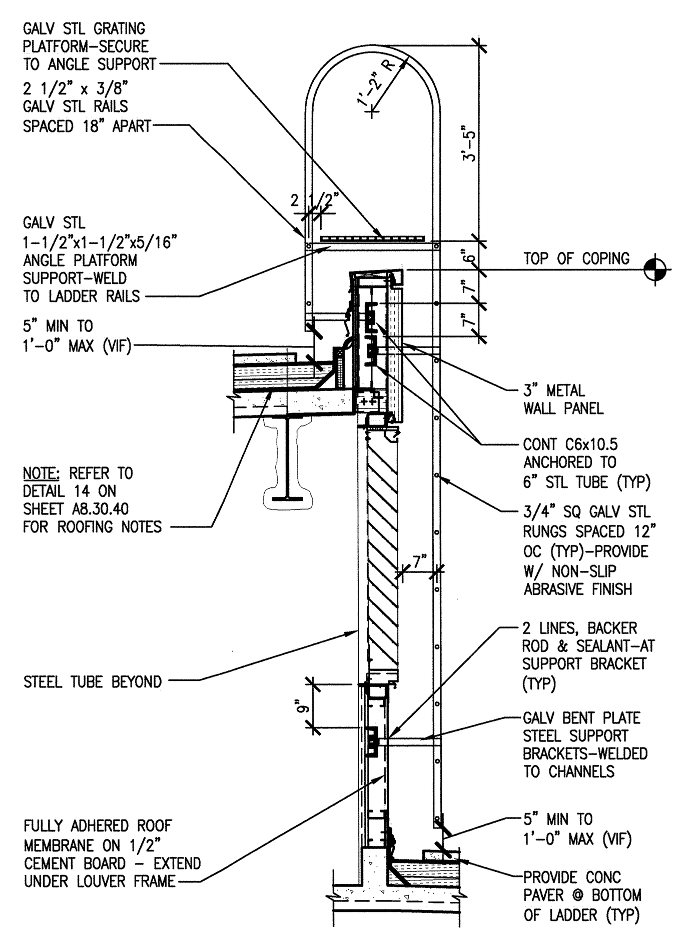

56 DETAIL-FIXED LADDER
A2.04.63 SCALE: 1/2"=1'-0" ADT077016-2B

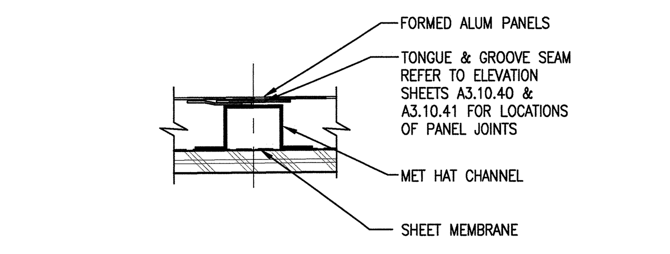

17 PANEL JOINT TYPICAL
A8.30.40 SCALE: 3"=1'-0" ADT077004-2B

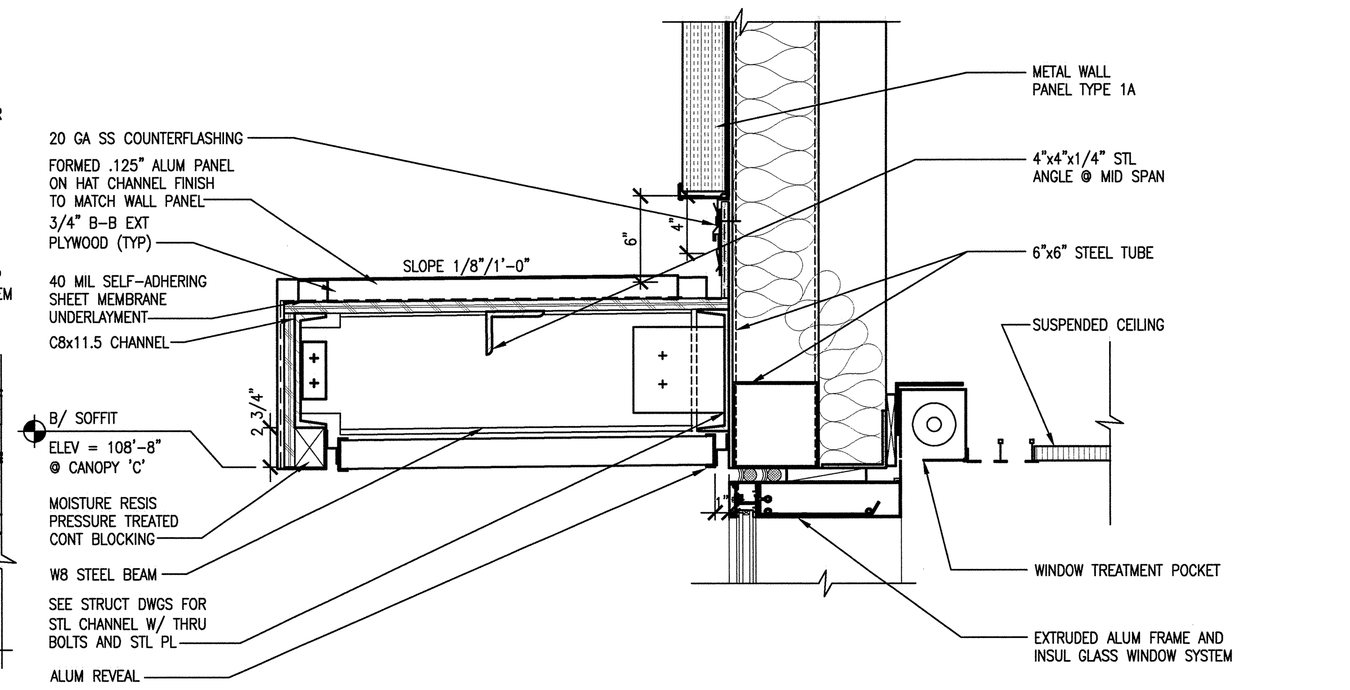

32 DETAIL - CANOPY @ WINDOW HEAD
A2.02.64 SCALE: 1 1/2"=1'-0" ADT077005-2B

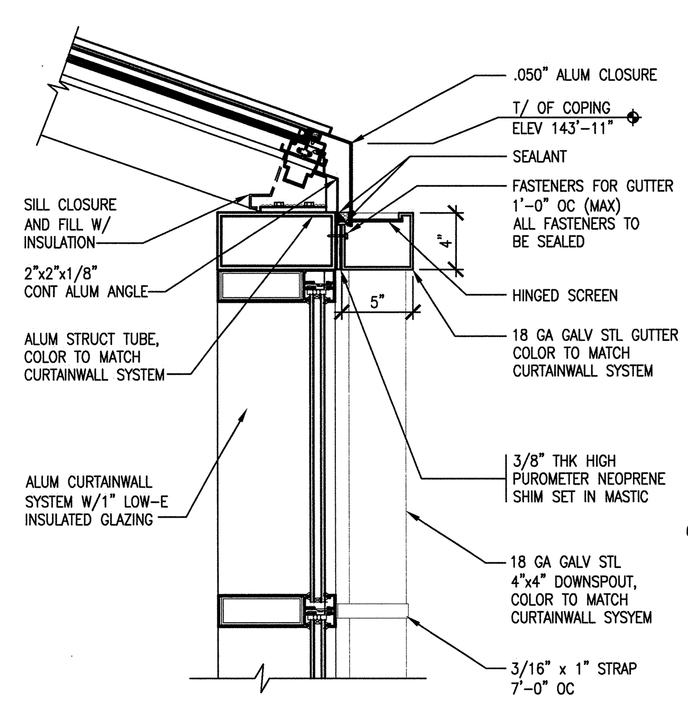

16 DETAIL - SKYLIGHT @ CURTAIN WALL
A3.40.43 SCALE: 1 1/2"=1'-0" ADT078004-2B

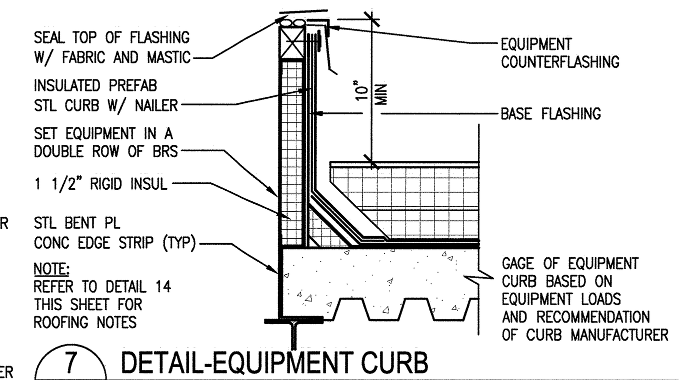

7 DETAIL-EQUIPMENT CURB
A2.05.63 SCALE: 1 1/2"=1'-0" ADT077009-2B

6" 5" 4" 3" 2" 1" 0 6" 1'
SCALE: 3" = 1'-0"

1' 9" 6" 3" 0 1' 2'
SCALE: 1-1/2" = 1'-0"

NO REPRESENTATION OR WARRANTY, EXPRESSED OR IMPLIED, IS MADE AS TO THE ACCURACY, COMPLETENESS OR USEFULNESS OF THE INFORMATION OR STATEMENTS CONTAINED IN THESE DRAWINGS, OR THAT THE USE OR DISCLOSURE OF ANY INFORMATION, APPARATUS, METHOD, OR PROCESS DISCLOSED IN THESE DRAWINGS MAY NOT INFRINGE PRIVATE RIGHTS OF OTHERS. NO LIABILITY IS ASSUMED WITH RESPECT TO THE USE OF, OR FOR DAMAGES RESULTING FROM THE USE OF ANY INFORMATION, APPARATUS, METHOD, OR PROCESS DISCLOSED IN THESE DRAWINGS. DRAWINGS MADE AVAILABLE FOR INFORMATION TO BIDDER ARE NOT TO BE USED FOR OTHER PURPOSES AND ARE TO BE RETURNED UPON REQUEST OF THE FORWARDING CONTRACTOR.

SECTION AND DETAIL KEY
NUMBER OF SECTION OR DETAIL
DRAWING ON WHICH SECTION OR DETAIL IS SHOWN OR TAKEN

THIS DOCUMENT CONTROLLED BY
CHANGE CONTROL SYSTEM 4
ENGINEERING PROCEDURE SNS-ENG-G001

REV	CHANGE TYPE	CHANGE CONTROL SYSTEM	CHANGE REQUEST NUMBER	DESCRIPTION	DSN	CHK	DEPT	DATE	PE	DATE	PJ	DATE	REQ	DATE	UTB	DATE	RPE	RPE NO	DATE
1				CERTIFIED FOR CONSTRUCTION – 12/20/01	CF	ED			[signature]	12/9	[signature]	12/01			[signature]	12/26/01	RLB	102104	12/20/01
0	–	4	–	CERTIFIED FOR CONSTRUCTION – MAY 15, 2001	CF	ED			CLG	9/6/01	JS	8/21/01			JRL	9/25/01	RLB	102104	5/15/01

REVISION OR ISSUE PURPOSE | REVISION APPROVALS

ST	CV	EC	EE	EM	IE	M	PD	SE	AR
RW	AW	BWJ	PD	BWJ	BWJ	--	BWJ	--	ED
SC	AW	WRS	RL	WRS	BWJ	--	WRS	--	WAS

SQUAD CHECK

RPE: ROBERT L. BARNES, REGISTERED ARCHITECT, No. 102104, STATE OF TENNESSEE — 18/12/01

DSN	H. BAUMAN	5/15/01
DRW	R. WEINMANN	5/15/01
CHK	E. DENSON	5/15/01
DEPT		
PE	C.L. GARREN	9/6/01
PJ	J. STELLERN	8/21/01
REQ		
UTB	J.R. LAWSON	9/25/01

REV. DATE — DRAWING APPROVALS

108031400-A8E-8600-A143

Knight/Jacobs — Knight/Jacobs Joint Venture, 701 Scarboro Road, MS 8253, Oak Ridge, TN 37830, 865-241-9433, fax 865-241-3400

KNIGHT — Knight Advanced Technology, 549 West Randolph Street, Chicago, IL 60661

UT-BATTELLE — Oak Ridge National Laboratory, managed for the DEPARTMENT OF ENERGY under U.S. GOVERNMENT contract DE-AC05-00OR22725, UT-BATTELLE, LLC, Oak Ridge, Tennessee

PROJECT NAME:
SPALLATION NEUTRON SOURCE

CENTRAL LAB AND OFFICE BUILDING ROOF DETAILS

1	48	49	50	PLANT	BLDG	FL	SH.	OF	TYPE	CLASS
3	A	X	X	8	8600		1	1	S	U

51	52	53	WBS		REV
NC	NA		1.8.3.14	A8.30.40	1

8 | 7 | 6 | 5 | 4 | 3 | 2 | 1