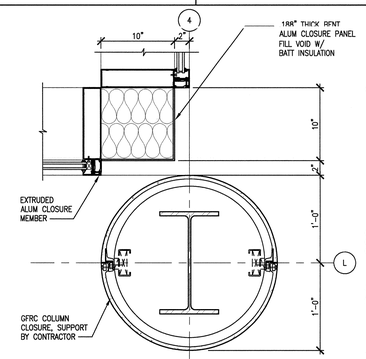

50 A3.30.46 PLAN DETAIL - CORNER MULLION / COL COVER
SCALE: 1 1/2"=1'-0" ADT077028-2B

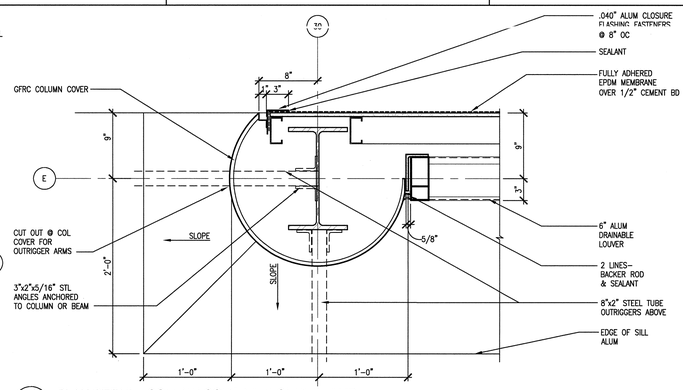

42 A3.30.46 PLAN DETAIL - COLUMN COVER AT LOUVER JAMB
SCALE: 1 1/2"=1'-0" ADT077052-2B

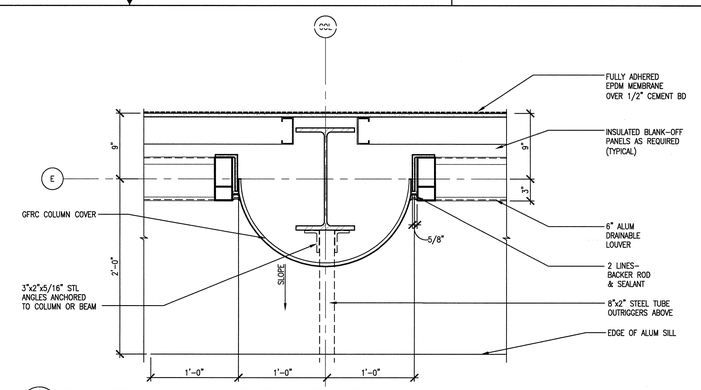

26 A3.30.47 PLAN DETAIL - COLUMN COVER AT LOUVER JAMB
SCALE: 1 1/2"=1'-0" ADT077046-2B

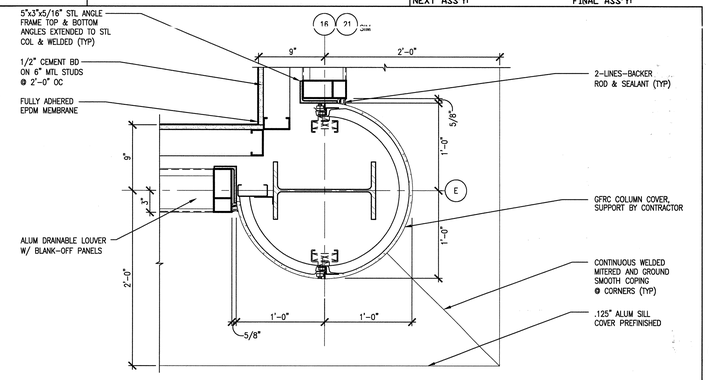

10 A3.30.47 PLAN DETAIL - LOUVER JAMB AND COLUMN COVER
SCALE: 1 1/2"=1'-0" ADT077049-2B

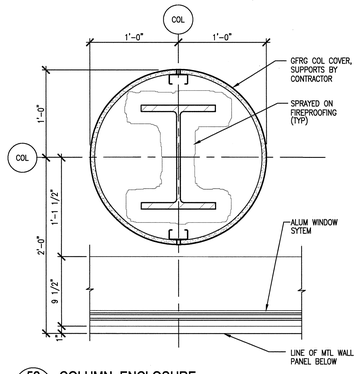

52 A3.30.44 COLUMN ENCLOSURE
1 1/2"=1'-0" ADT092092-2B

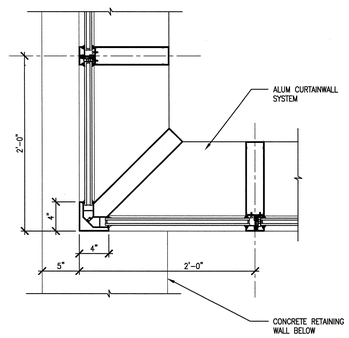

44 A8.20.44 PLAN DETAIL - CURTAINWALL CORNER
SCALE: 1 1/2" = 1'- 0" ADT092007-2B

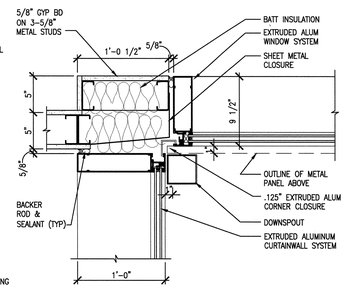

36 A3.30.46 PLAN DETAIL AT CURTAINWALL AND WINDOW
SCALE: 1 1/2"=1'-0" ADT077050-2B

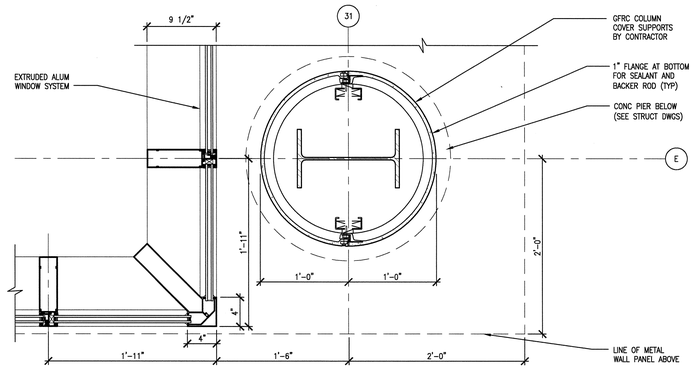

28 A3.30.46 PLAN DETAIL AT WINDOW CORNER AND COLUMN COVER
SCALE: 1 1/2"=1'-0" ADT077051-2B

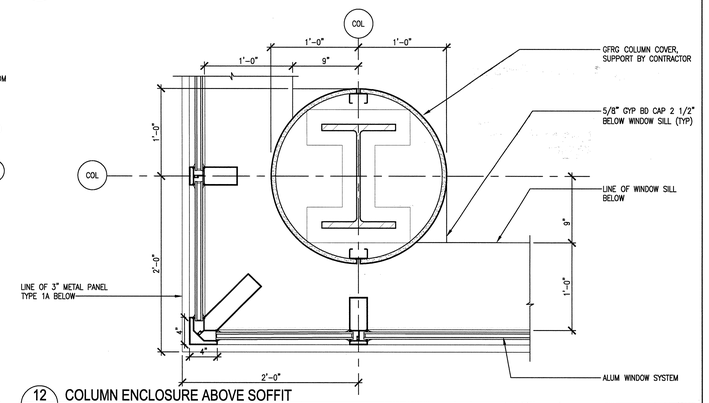

12 A3.30.46 COLUMN ENCLOSURE ABOVE SOFFIT
SCALE: 1 1/2"=1'-0" ADT092002-2B

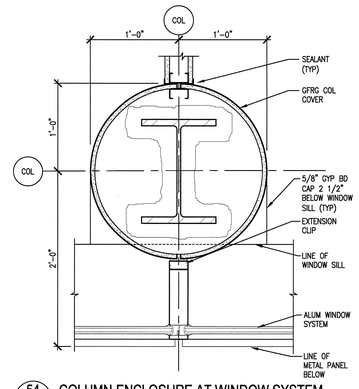

54 A8.20.44 COLUMN ENCLOSURE AT WINDOW SYSTEM
1 1/2"=1'-0" ADT092091-2B

46 A2.B1.61 PLAN DETAIL - CURTAINWALL JAMB
SCALE: 1 1/2"=1'-0" ADT092080-2B

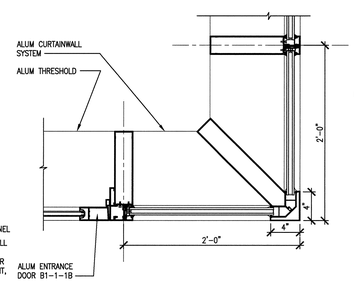

38 A2.B1.61 PLAN DETAIL-CURTAINWALL CORNER
SCALE: 1 1/2" = 1'- 0" ADT092006-2B

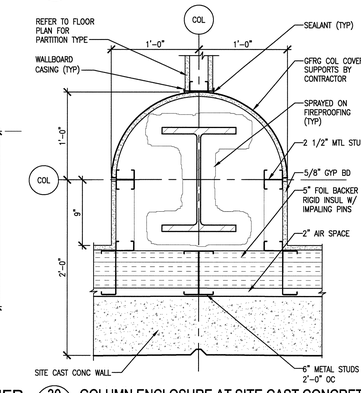

30 A8.20.44 COLUMN ENCLOSURE AT SITE CAST CONCRETE
1 1/2"=1'-0" ADT092004-2B

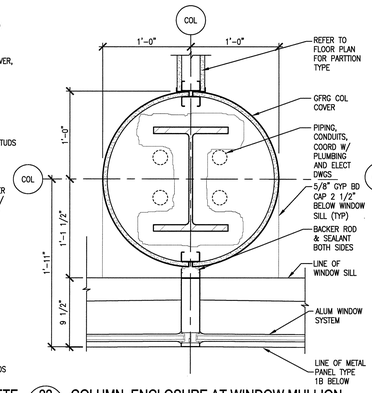

22 A2.02.62 COLUMN ENCLOSURE AT WINDOW MULLION
1 1/2"=1'-0" ADT092003-2B

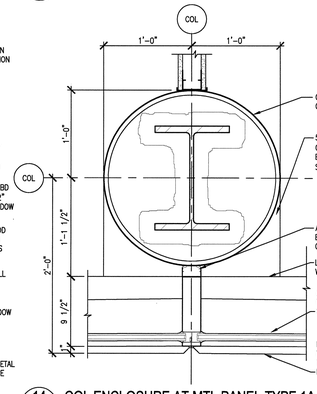

14 A3.30.49 COL ENCLOSURE AT MTL PANEL TYPE 1A
SCALE: 1-1/2"=1'-0" ADT092020-2B

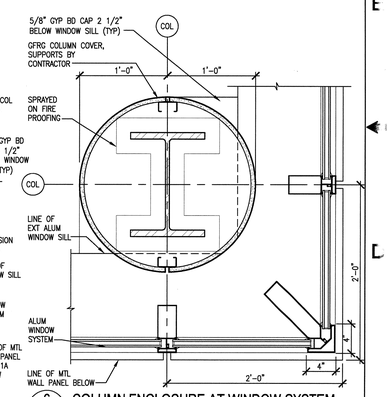

6 A8.20.44 COLUMN ENCLOSURE AT WINDOW SYSTEM
SCALE: 1 1/2"=1'-0" ADT092005-2B

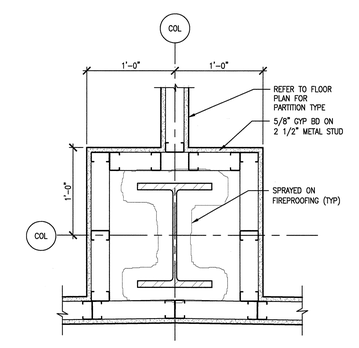

56 A2.02.62 PLAN DET - TYP ICAL COLUMN ENCLOSURE
1 1/2"=1'-0" ADT092001-2B

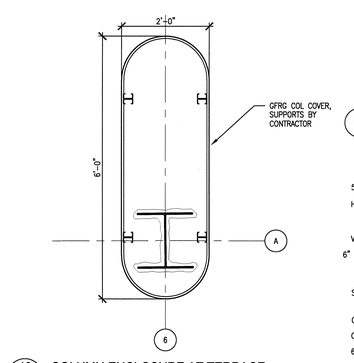

48 A3.30.42 COLUMN ENCLOSURE AT TERRACE
3/4"=1'-0" ADT092014-2B

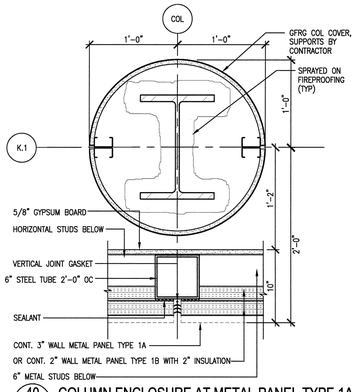

40 A2.B1.64 COLUMN ENCLOSURE AT METAL PANEL TYPE 1A
1 1/2"=1'-0" ADT092011-2B

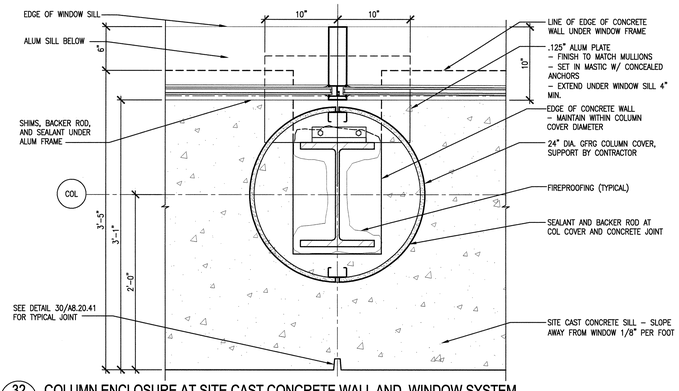

32 A3.30.49 COLUMN ENCLOSURE AT SITE CAST CONCRETE WALL AND WINDOW SYSTEM
SCALE: 1 1/2"=1'-0" ADT092010-2B

6" 5" 4" 3" 2" 1" 0 6" 1'
SCALE: 3" = 1'-0"

1' 9" 6" 3" 0 1' 2'
SCALE: 1-1/2" = 1'-0"

1' 6" 0 1' 2'
SCALE: 3/4" = 1'-0"

NO REPRESENTATION OR WARRANTY, EXPRESSED OR IMPLIED, IS MADE AS TO THE ACCURACY, COMPLETENESS OR USEFULNESS OF THE INFORMATION OR STATEMENTS CONTAINED IN THESE DRAWINGS, OR THAT THE USE OR DISCLOSURE OF ANY INFORMATION, APPARATUS, METHOD, OR PROCESS DISCLOSED IN THESE DRAWINGS MAY NOT INFRINGE PRIVATE RIGHTS OF OTHERS. NO LIABILITY IS ASSUMED WITH RESPECT TO THE USE OF, OR FOR DAMAGES RESULTING FROM THE USE OF ANY INFORMATION, APPARATUS, METHOD, OR PROCESS DISCLOSED IN THESE DRAWINGS. DRAWINGS MADE AVAILABLE FOR INFORMATION TO BIDDER ARE NOT TO BE USED FOR OTHER PURPOSES AND ARE TO BE RETURNED UPON REQUEST OF THE FORWARDING CONTRACTOR.

NUMBER OF SECTION OR DETAIL
DRAWING ON WHICH SECTION OR DETAIL IS SHOWN OR TAKEN
SECTION AND DETAIL KEY

THIS DOCUMENT CONTROLLED BY
CHANGE CONTROL SYSTEM 4
ENGINEERING PROCEDURE SNS-ENG-G001

REV	CHANGE TYPE	CHANGE CONTROL SYSTEM	CHANGE REQUEST NUMBER	DESCRIPTION	DSN	CHK	DEPT
1				CERTIFIED FOR CONSTRUCTION - 12/20/01	CF	ED	
0	-	4	-	CERTIFIED FOR CONSTRUCTION - MAY 15, 2001	CF	ED	

REVISION OR ISSUE PURPOSE

DATE	PE	DATE	PJ	DATE	REQ	DATE	UTB	DATE	RPE	RPE NO	DATE
	CLG	9/6/01	JS	8/21/01			JRL	9/25/01	RLB	102104	5/15/01
									RLB	102104	12/20/01

REVISION APPROVALS

ST	CV	EC	EE	EM	IE	M	PD	SE	AR
SC	AW	WRS	RL	WRS	BWJ	--	WRS	--	WAS
RW	AW	BWJ	PD	BWJ	BWJ	--	BWJ	--	ED

SQUAD CHECK

RPE
ROBERT L. BARNES REGISTERED ENGINEER STATE OF TENNESSEE NO. 102104
12/20/01

DSN	H. BAUMAN	5/15/01
DRW	R. WEINMANN	5/15/01
CHK	E. DENSON	5/15/01
DEPT		
PE	C.L. GARREN	9/6/01
PJ	J. STELLERN	8/21/01
REQ		
UTB	J.R. LAWSON	9/25/01

REV. DATE DRAWING APPROVALS

108031400-A8E-8600-A137

Knight Jacobs
Knight/Jacobs Joint Venture
701 Scarboro Road, MS 8253
Oak Ridge, TN 37830
865-241-9433
fax 865-241-3400
KNIGHT
Knight Advanced Technology
549 West Randolph Street
Chicago, IL 60661

UT-BATTELLE
Oak Ridge National Laboratory
managed for the DEPARTMENT OF ENERGY under U.S. GOVERNMENT contract DE-AC05-00OR22725
© UT-BATTELLE, LLC, © Oak Ridge, Tennessee

PROJECT NAME:
SPALLATION NEUTRON SOURCE
CENTRAL LAB AND OFFICE BUILDING
EXTERIOR & INTERIOR COLUMN DETAILS

1	48	49	50	PLANT	BLDG	FL	SH.	OF	TYPE	CLASS
3	A	X	X	8	8600		1	1	S	U

51	52	53	WBS	REV
NC	NA		1.8.3.14	1

A8.20.44

Date: 12/13/2001 Time: 20:09:24
User name: SCHAFER
CAD-FILE: /KSJ/PROJECTS/SNS/108_CAD/CIVIL/E1/A8_PLT/UR-20-44.DWG