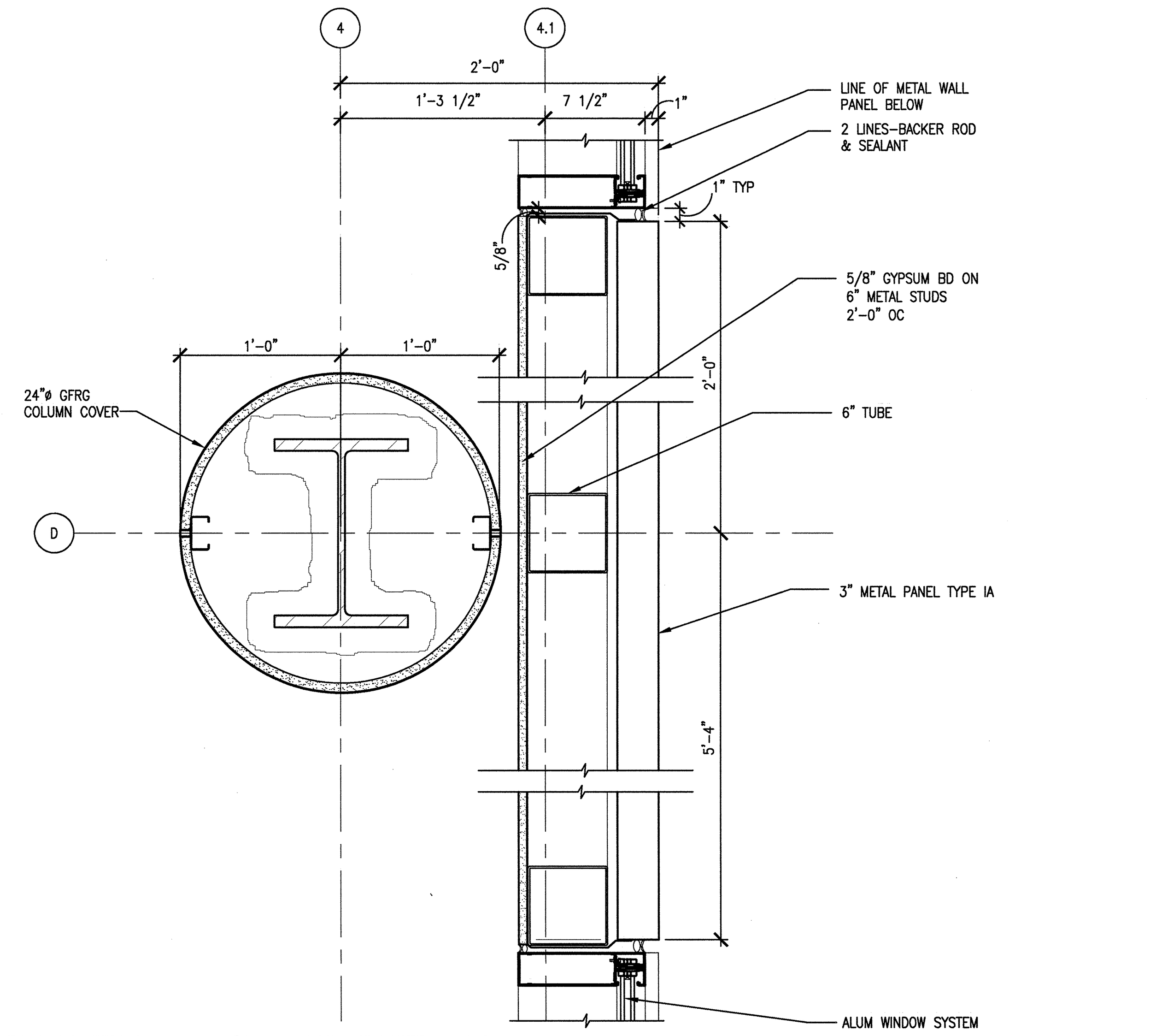

51 PLAN DETAIL - WINDOW JAMB AT METAL WALL
A8.20.43 SCALE: 1 1/2"=1'-0" ADT077043-2B

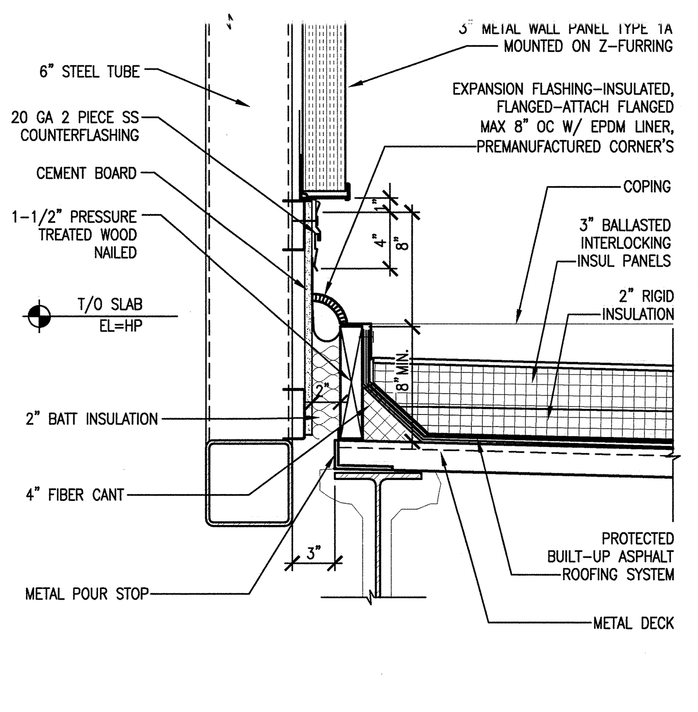

24 ROOF EXPANSION JOINT @ PEDESTRIAN BRIDGE
A8.20.45 SCALE: 1-1/2"=1'-0" ADT034030-2B

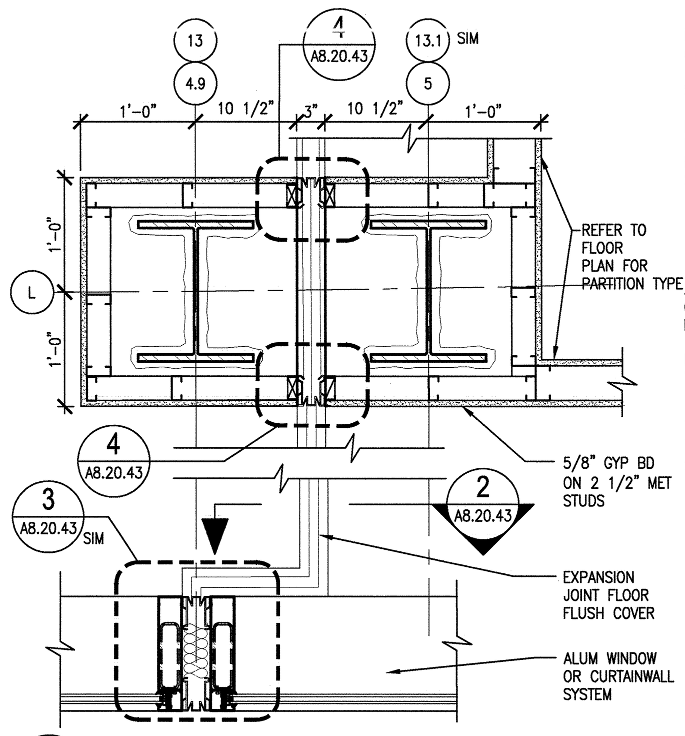

23 PLAN DETAIL - EXPANSION JOINT
A8.20.43 SCALE: 1"=1'-0" ADT034040-2B

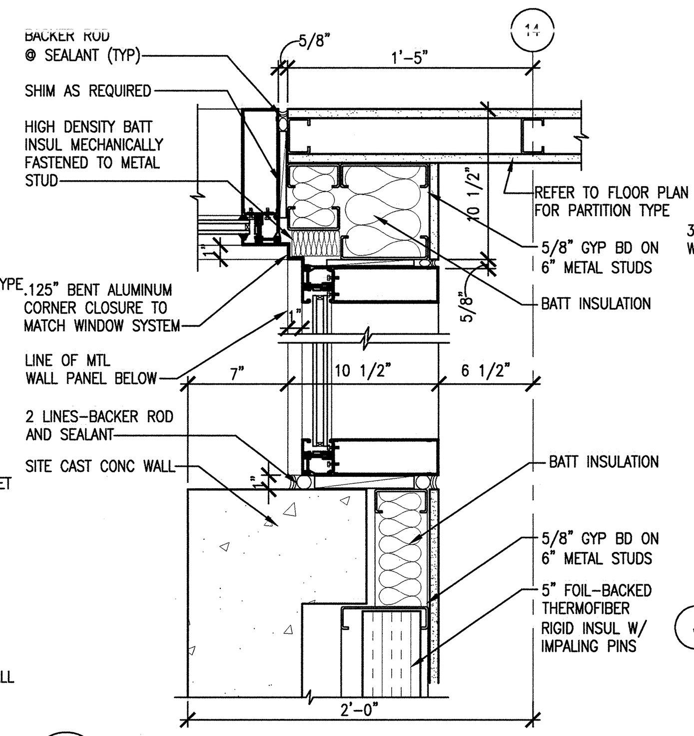

15 PLAN DETAIL - WINDOW WALL JAMB
A3.30.44 SCALE: 1 1/2"=1'-0" ADT077031-2B

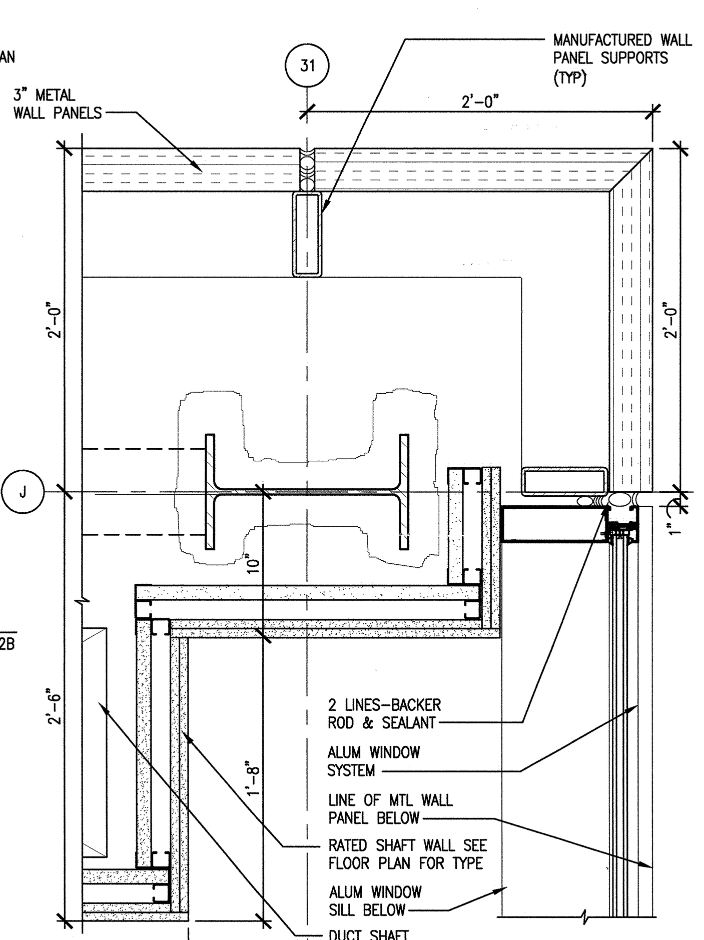

11 PLAN DET-MTL PANEL CORNER & WINDOW JAMB
A3.30.47 SCALE: 1 1/2"=1'-0" ADT077029-2B

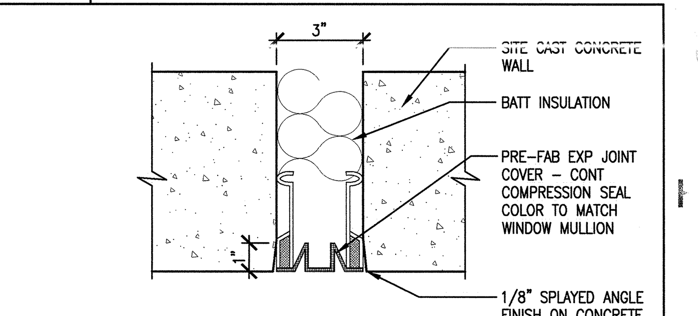

1 DETAIL - EXPANSION JOINT @ CONCRETE WALL
A8.20.43 SCALE: 3"=1'-0" ADT034022-2B

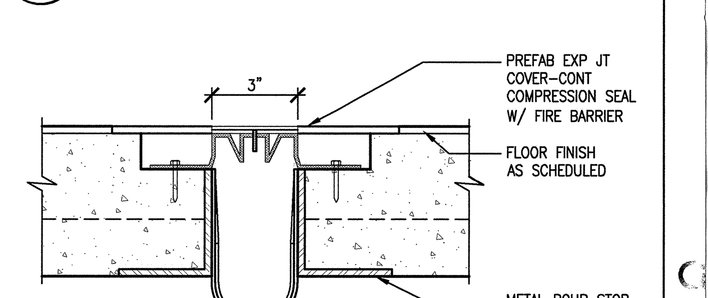

2 DETAIL - EXPANSION JOINT COVER @ FLOOR
A8.20.43 SCALE: 3"=1'-0" ADT03426-2B

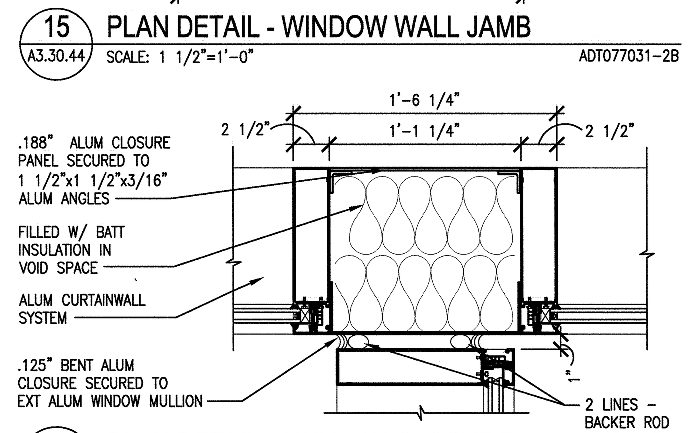

17 PLAN DETAIL - MULLION CLOSURE
A8.20.43 SCALE: 1 1/2"=1'-0" ADT077026-2B

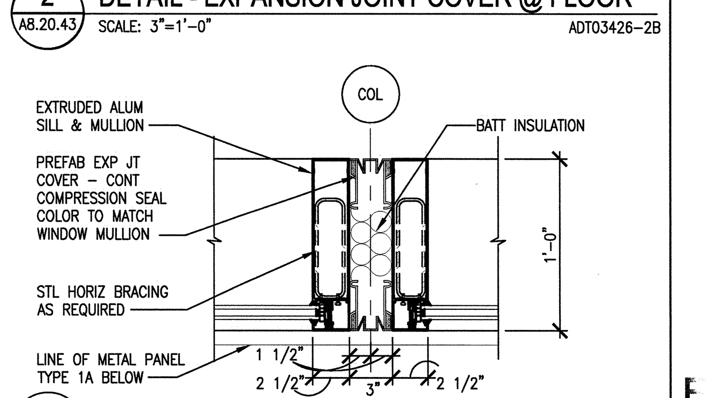

3 DETAIL - EXPANSION JOINT @ CURTAINWALL
A3.30.42 SCALE: 1-1/2"=1'-0" ADT034023-2B

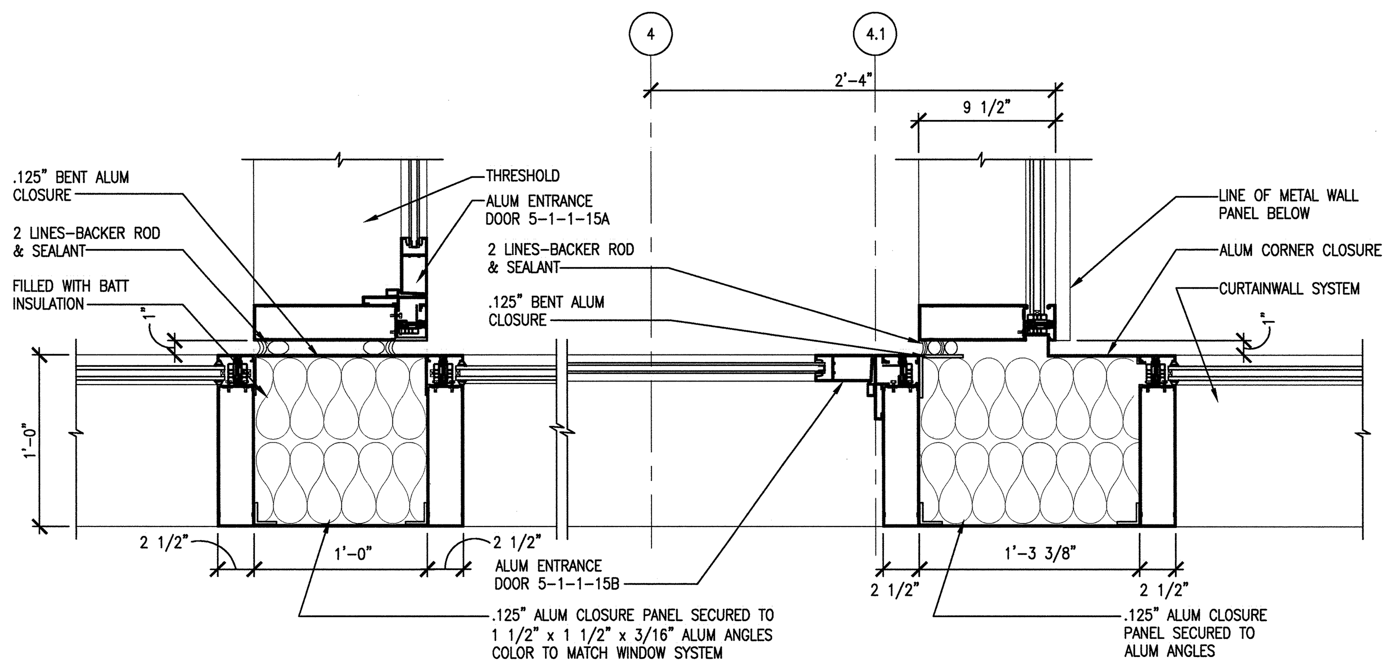

53 PLAN DETAIL - CURTAINWALL JAMBS
A8.20.43 SCALE: 1 1/2"=1'-0" ADT077041-2B

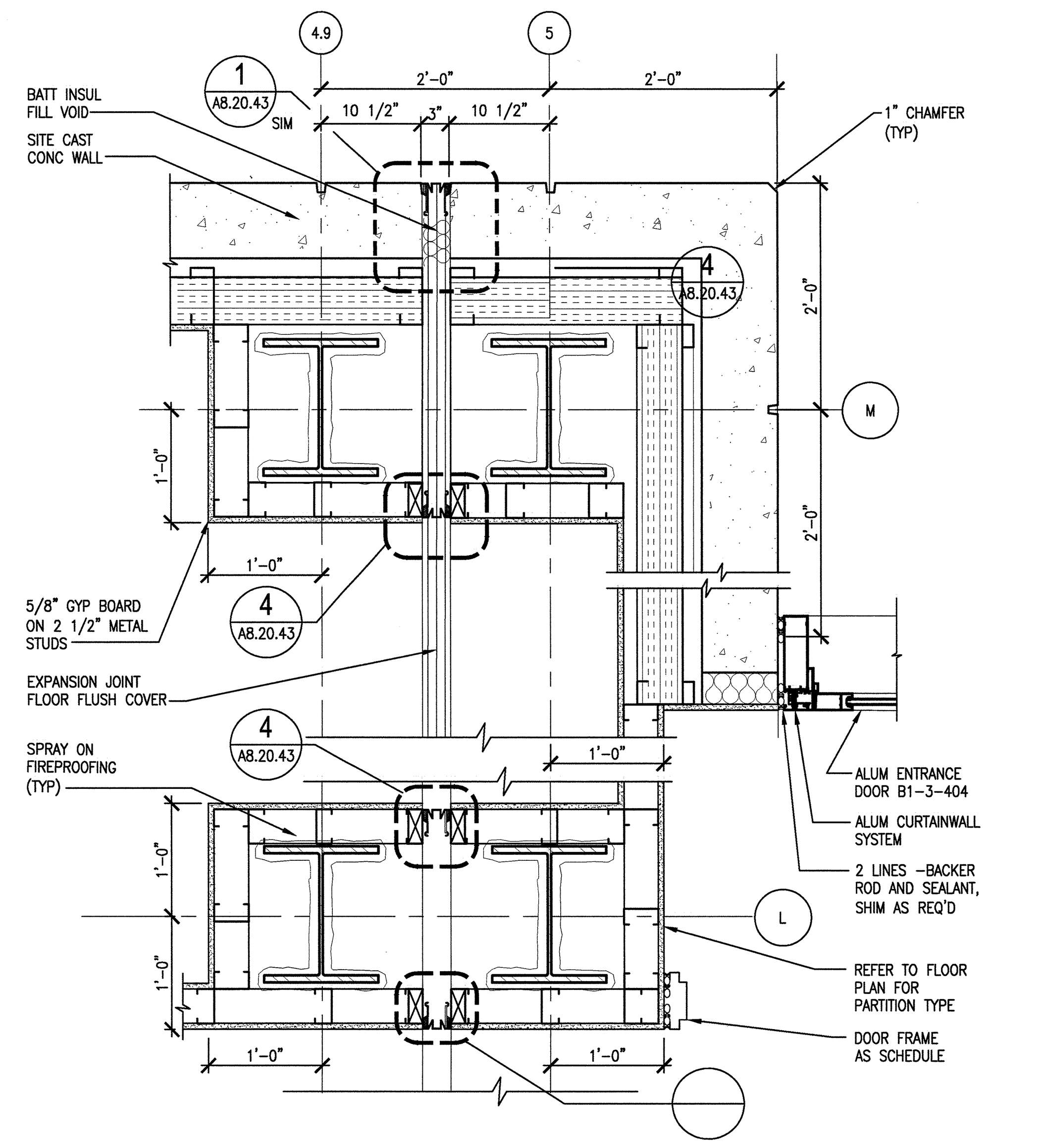

35 DETAIL-EXPANSION JOINT AT SITE CAST CONC
A3.40.40 SCALE: 1"=1'-0" ADT034028-2B

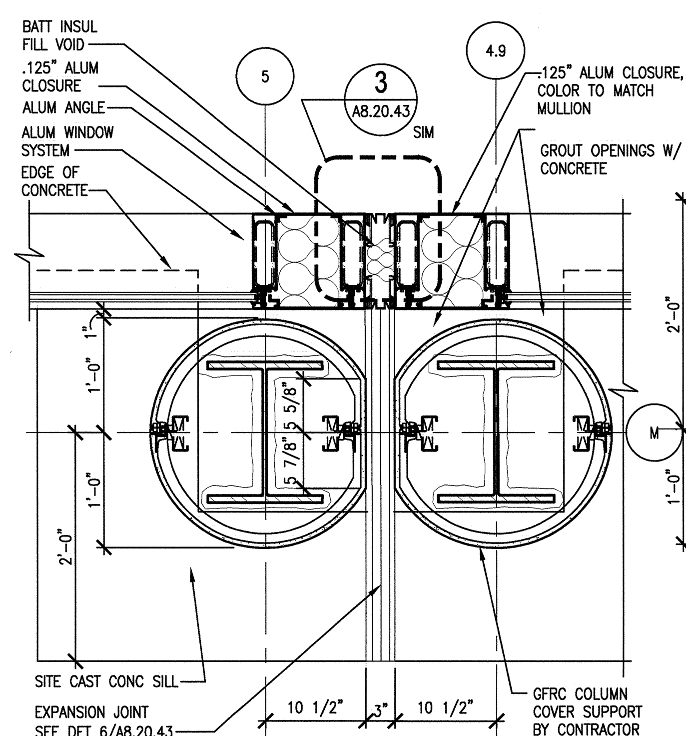

19 PLAN DETAIL - EXPANSION JOINT
A3.30.40 SCALE: 1"=1'-0" ADT034029-2B

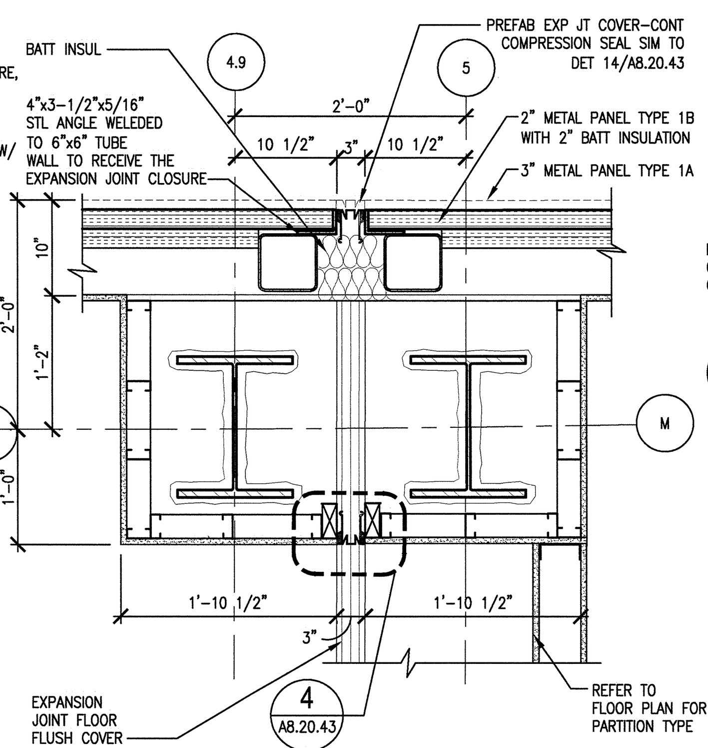

13 PLAN DETAIL-EXPANSION JOINT AT METAL PANEL
A3.40.40 SCALE: 1"=1'-0" ADT034031-2B

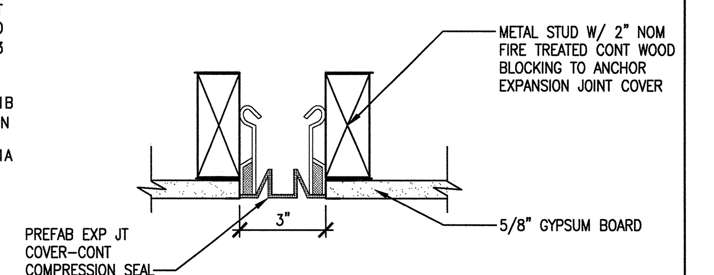

4 DETAIL - EXPANSION JOINT COVER
A8.20.43 SCALE: 3"=1'-0" ADT034024-2B

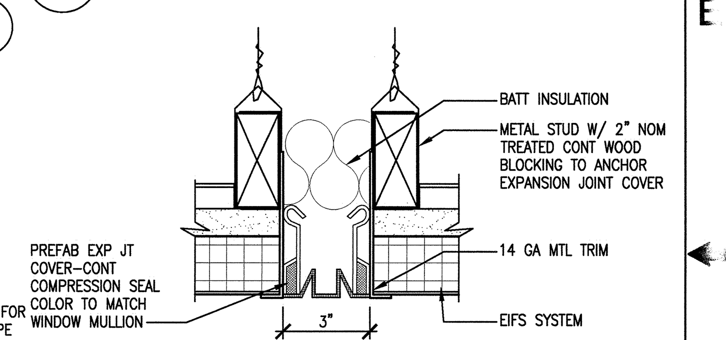

5 DETAIL - EXPANSION JOINT @ EIFS SOFFIT
A8.20.43 SCALE: 3"=1'-0" ADT034025-2B

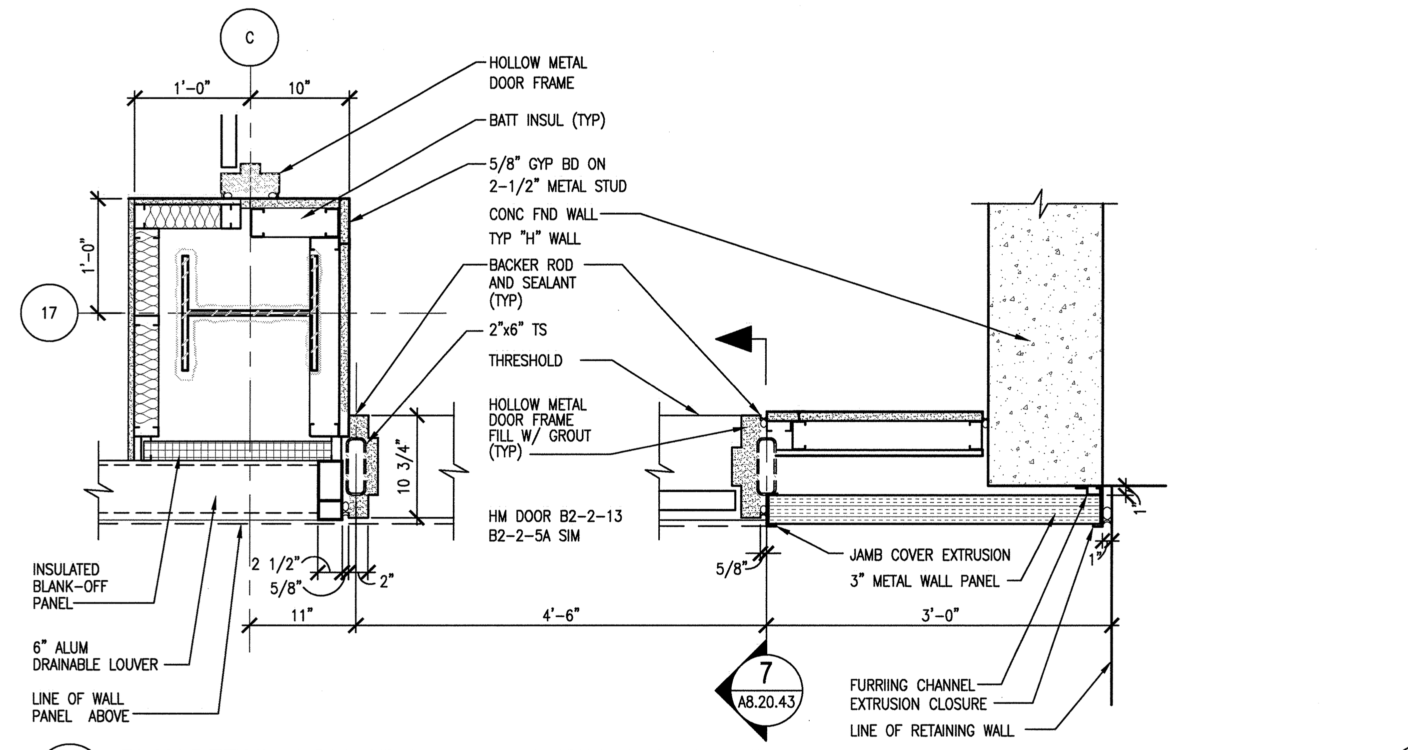

55 PLAN DETAIL - LOUVER JAMB AND METAL WALL PANEL JAMB
A3.30.44 SCALE: 1"=1'-0" ADT074087-2B

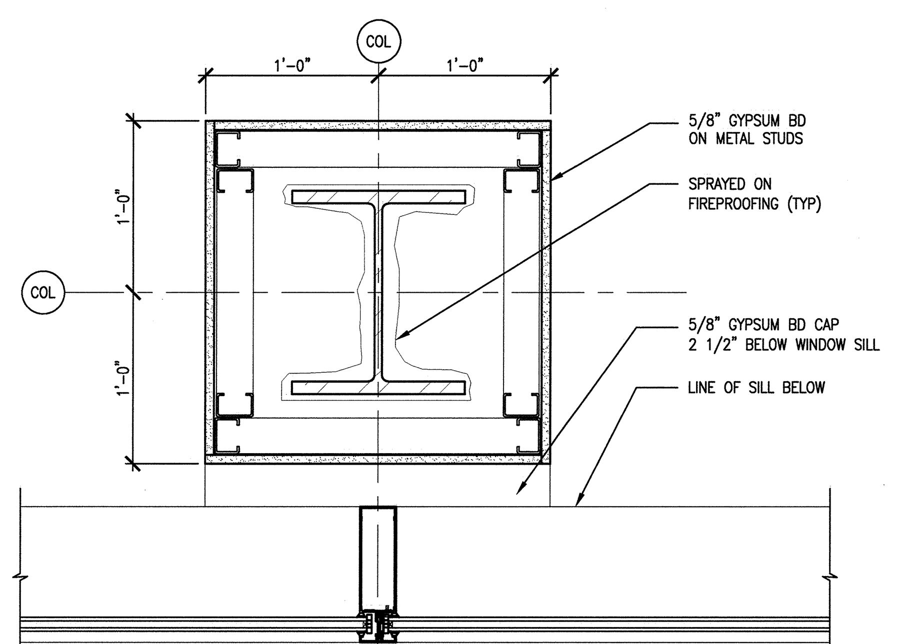

39 COLUMN ENCLOSURE AT WINDOW MULLION
A3.30.47 SCALE: 1 1/2"=1'-0" ADT077040-2B

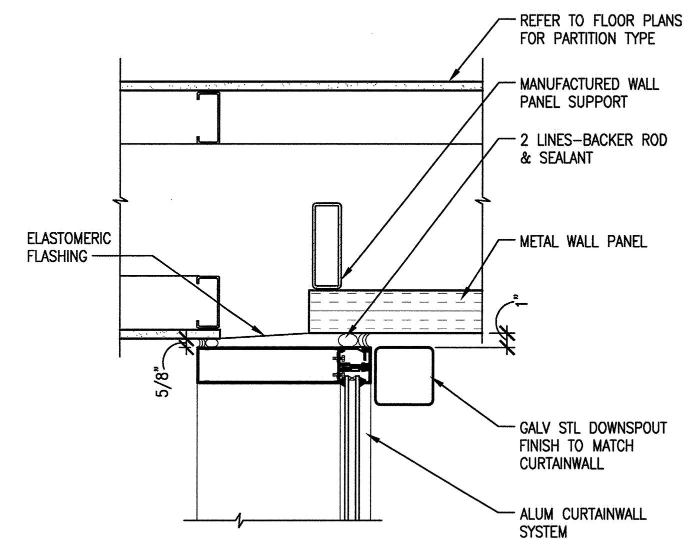

21 PLAN DETAIL - CURTAINWALL JAMB
A3.30.46 SCALE: 1 1/2"=1'-0" ADT077030-2B

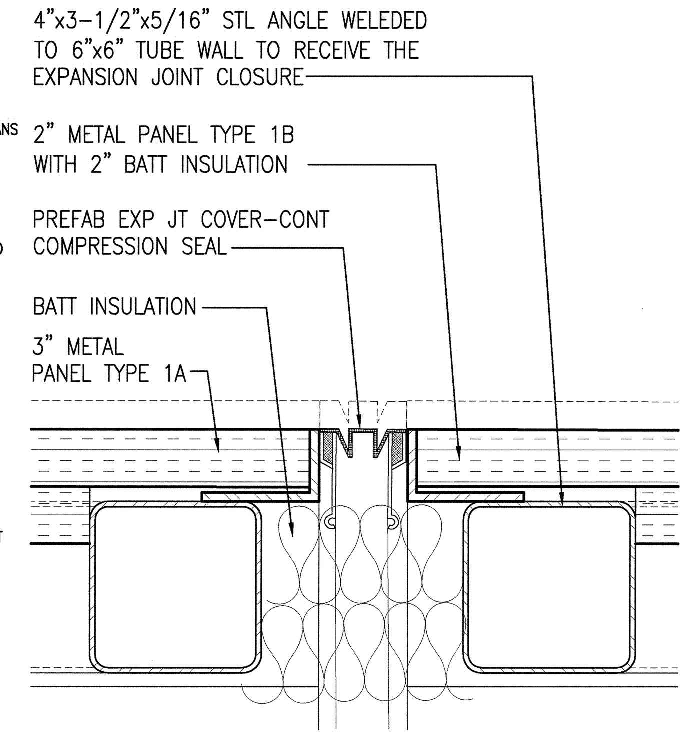

14 DETAIL - EXPANSION JOINT @ METAL PANEL
A8.20.43 SCALE: 3"=1'-0" ADT034021-2B

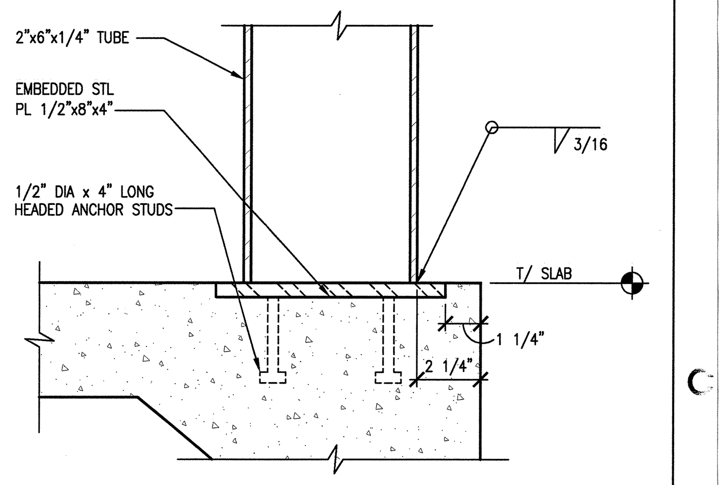

7 DETAIL - TUBE SUPPORT
A8.20.43 SCALE: 3"=1'-0" ADT034039-2B

6" 5" 4" 3" 2" 1" 0 6" 1'
SCALE: 3" = 1'-0"

1' 9" 6" 3" 0 1' 2'
SCALE: 1-1/2" = 1'-0"

108031400-A8E-8600-A136

Knight/Jacobs Joint Venture
701 Scarboro Road, MS 8253
Oak Ridge, TN 37830
865-241-9433
fax 865-241-3400

KNIGHT
Knight Advanced Technology
549 West Randolph Street
Chicago, IL 60661

UT-BATTELLE
Oak Ridge National Laboratory
managed for the DEPARTMENT OF ENERGY under U.S. GOVERNMENT contract DE-AC05-00OR22725
UT-BATTELLE, LLC, © Oak Ridge, Tennessee

PROJECT NAME:
SPALLATION NEUTRON SOURCE

CENTRAL LAB AND OFFICE BUILDING EXTERIOR & INTERIOR COLUMN DETAILS, EXPANSION JOINTS

1	48	49	50	PLANT	BLDG	FL	SH.	OF	TYPE	CLASS
3	A	X	X	8	8600		1	1	S	U
51	52		53		WBS					REV
NC	NA				1.8.3.14		A8.20.43			1

RPE			
DSN	H. BAUMAN	5/15/01	
DRW	R. WEINMANN	5/15/01	
CHK	E. DENSON	5/15/01	
DEPT			
PE	C.L. GARREN	9/6/01	
PJ	J. STELLERN	8/21/01	
REQ			
UTB	J.R. LAWSON	9/25/01	

ROBERT L. BARNES REGISTERED ARCHITECT NO. 102104 STATE OF TENNESSEE
12/12/01
REV. DATE DRAWING APPROVALS

REV	CHANGE TYPE	CHANGE CONTROL SYSTEM	CHANGE REQUEST NUMBER	DESCRIPTION	DSN	CHK	DEPT	DATE	PE	DATE	PJ	DATE	REQ	DATE	UTB	DATE	RPE	RPE NO	DATE	ST	CV	EC	EE	EM	IE	M	PD	SE	AR
1				CERTIFIED FOR CONSTRUCTION - 12/20/01	CF	ED				12/1/01		12/01				12/26/01	RLB	102104	12/20/01	RW	AW	BWJ	PD	BWJ	BWJ	--	BWJ	--	ED
0	-	4	-	CERTIFIED FOR CONSTRUCTION - MAY 15, 2001	CF	ED			CLG	9/6/01	JS	8/21/01			JRL	9/25/01	RLB	102104	5/15/01	SC	AW	WRS	RL	WRS	BWJ	--	WRS	--	WAS

REVISION OR ISSUE PURPOSE — REVISION APPROVALS — SQUAD CHECK

THIS DOCUMENT CONTROLLED BY
CHANGE CONTROL SYSTEM 4
ENGINEERING PROCEDURE SNS-ENG-G001

NUMBER OF SECTION OR DETAIL
DRAWING ON WHICH SECTION OR DETAIL IS SHOWN OR TAKEN
SECTION AND DETAIL KEY

NO REPRESENTATION OR WARRANTY, EXPRESSED OR IMPLIED, IS MADE AS TO THE ACCURACY, COMPLETENESS OR USEFULNESS OF THE INFORMATION OR STATEMENTS CONTAINED IN THESE DRAWINGS, OR THAT THE USE OR DISCLOSURE OF ANY INFORMATION, APPARATUS, METHOD, OR PROCESS DISCLOSED IN THESE DRAWINGS MAY NOT INFRINGE PRIVATE RIGHTS OF OTHERS. NO LIABILITY IS ASSUMED WITH RESPECT TO THE USE OF, OR FOR DAMAGES RESULTING FROM THE USE OF ANY INFORMATION, APPARATUS, METHOD, OR PROCESS DISCLOSED IN THESE DRAWINGS. DRAWINGS MADE AVAILABLE FOR INFORMATION TO BIDDER ARE NOT TO BE USED FOR OTHER PURPOSES AND ARE TO BE RETURNED UPON REQUEST OF THE FORWARDING CONTRACTOR.

AutoCAD

Date: 12/17/2001 Time: 20:26:56
Username: SICILIAMS
CHI-F_VOL2:PROJECTS\7000\700_CADD\TASK_2B\740_PLOT\A8-20-43.DWG