8 | 7 | 6 | 5 | 4 | 3 | 2 | NEXT ASS'Y | 1 FINAL ASS'Y

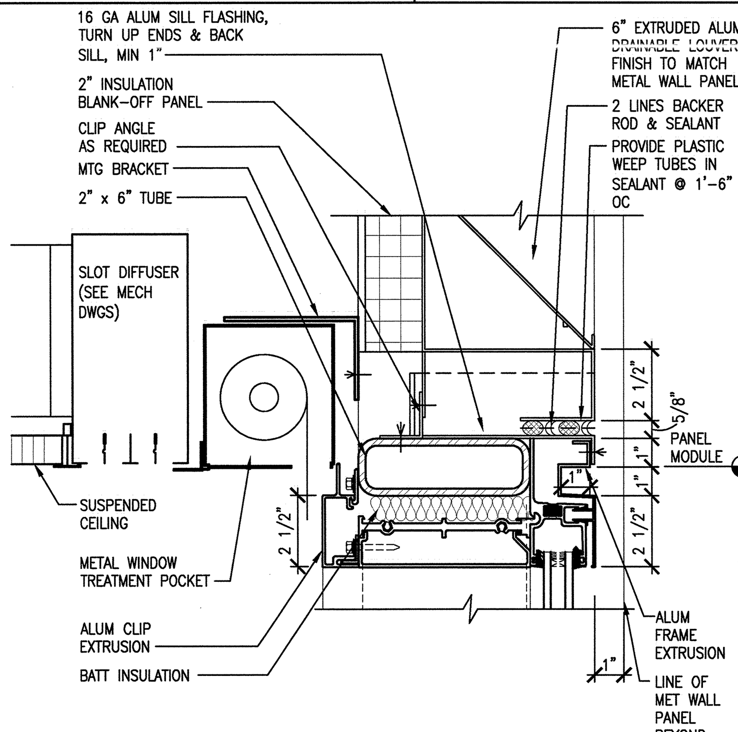

50 DETAIL - WINDOW HEAD @ LOUVER SILL
A3.30.47 SCALE: 3"=1'-0" ADT074058-2B

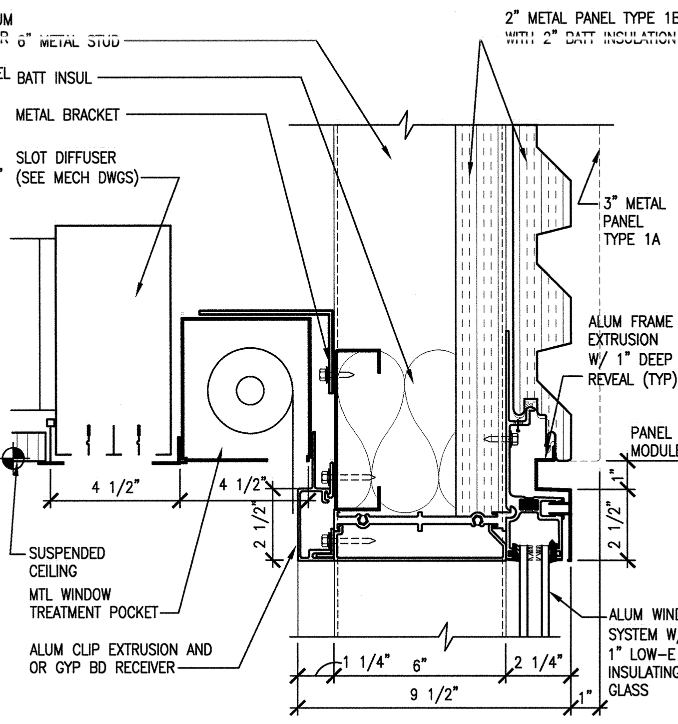

42 DETAIL - WINDOW HEAD W/ SHADE POCKET
A3.30.44 SCALE: 3"=1'-0" ADT074038-2B

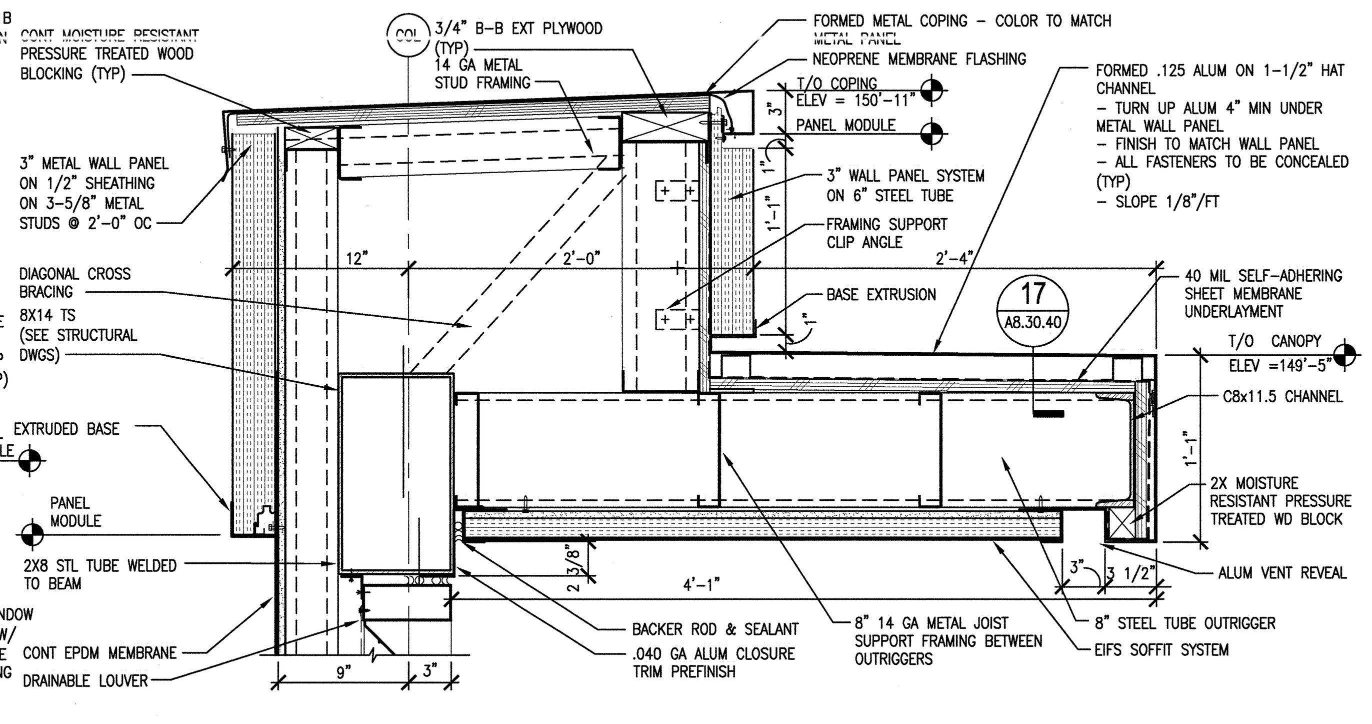

34 DETAIL - LOUVER HEAD @ SECTOR 63
A3.30.47 SCALE: 1-1/2"=1'-0" ADT074054-2B

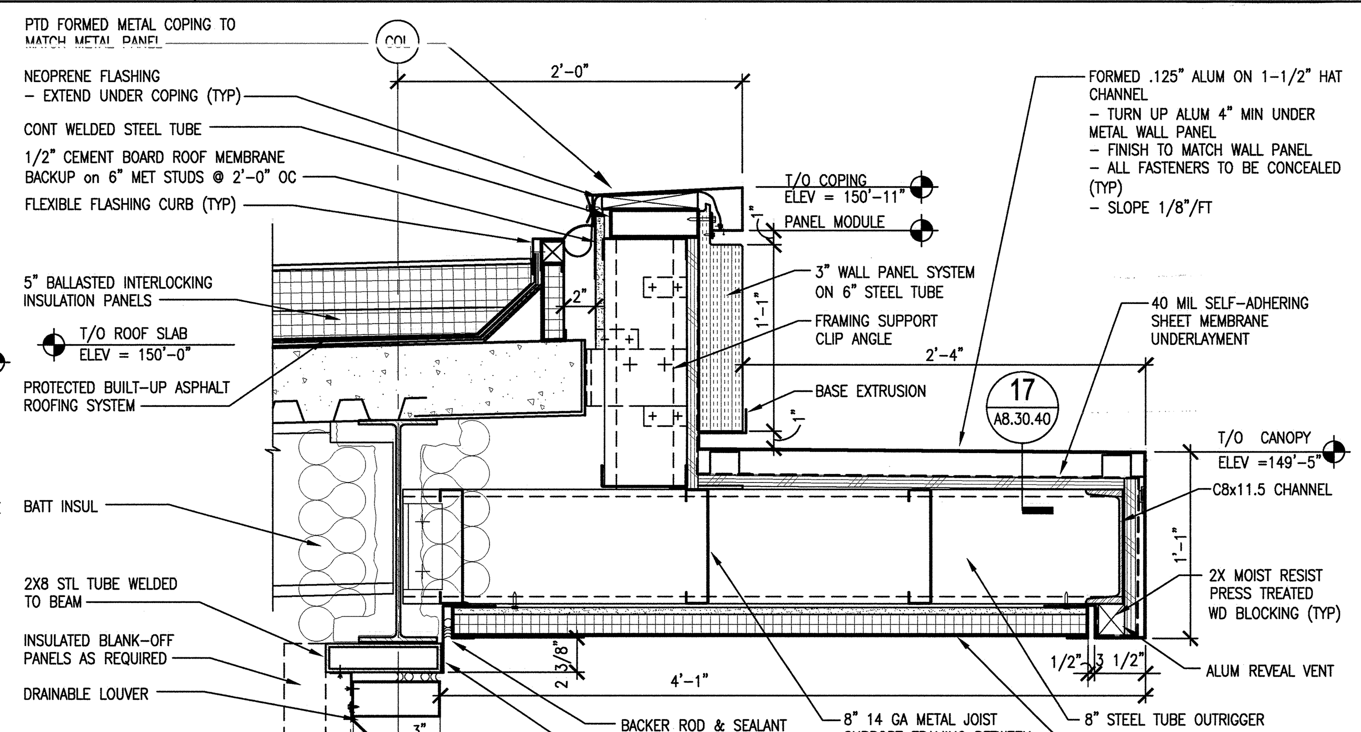

18 DETAIL - ROOF EDGE @ SECTOR 63
A3.30.47 SCALE: 1-1/2"=1'-0" ADT074053-2B

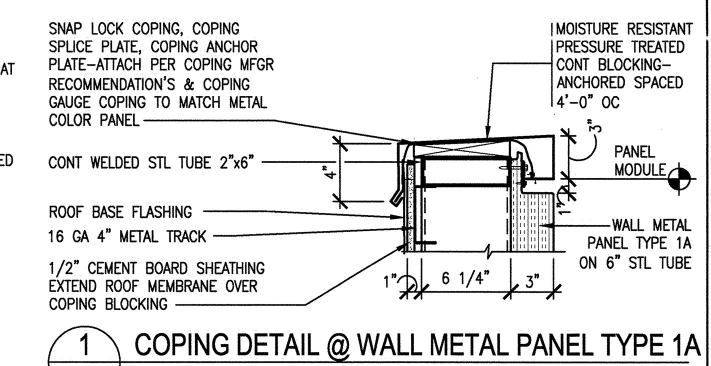

1 COPING DETAIL @ WALL METAL PANEL TYPE 1A
A3.30.41 SCALE: 1-1/2"=1'-0" ADT074021-2B

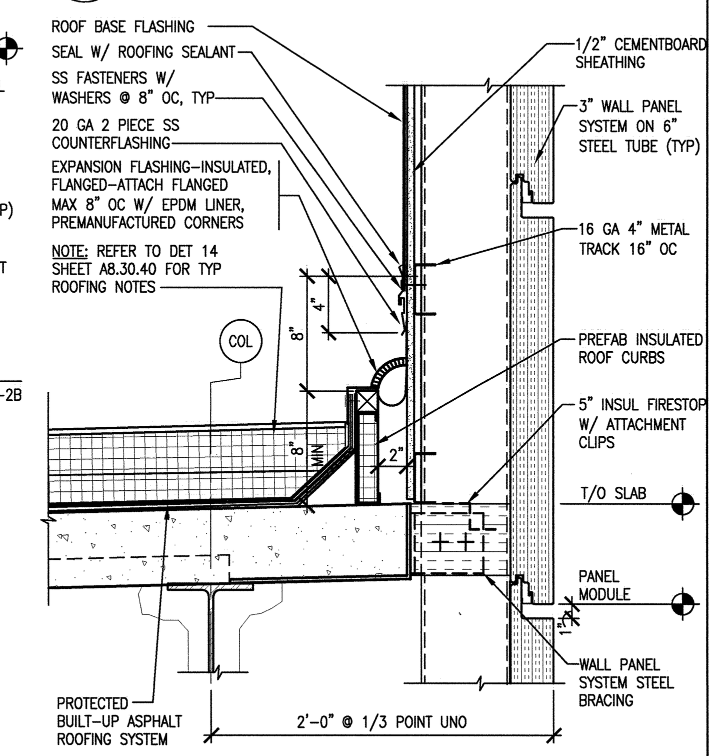

3 PARAPET @ WALL METAL PANEL TYPE 1A
A3.30.41 SCALE: 1-1/2"=1'-0" ADT074022-2B

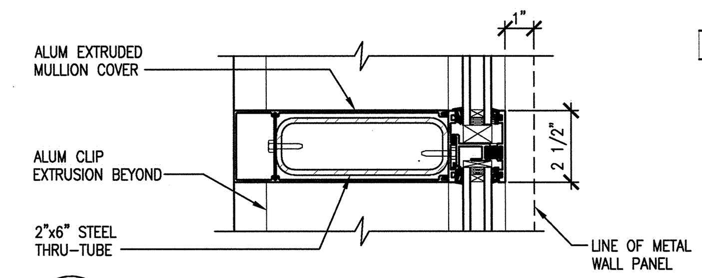

51 DETAIL - VERTICAL WINDOW MULLION
A3.30.41 SCALE: 3"=1'-0" ADT074041-2B

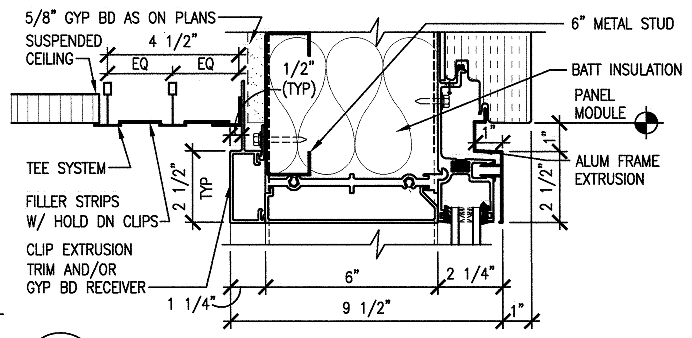

43 WALL PANEL TYPE 1A @ WINDOW HEAD
A3.30.44 SCALE: 3"=1'-0" ADT074039-2B

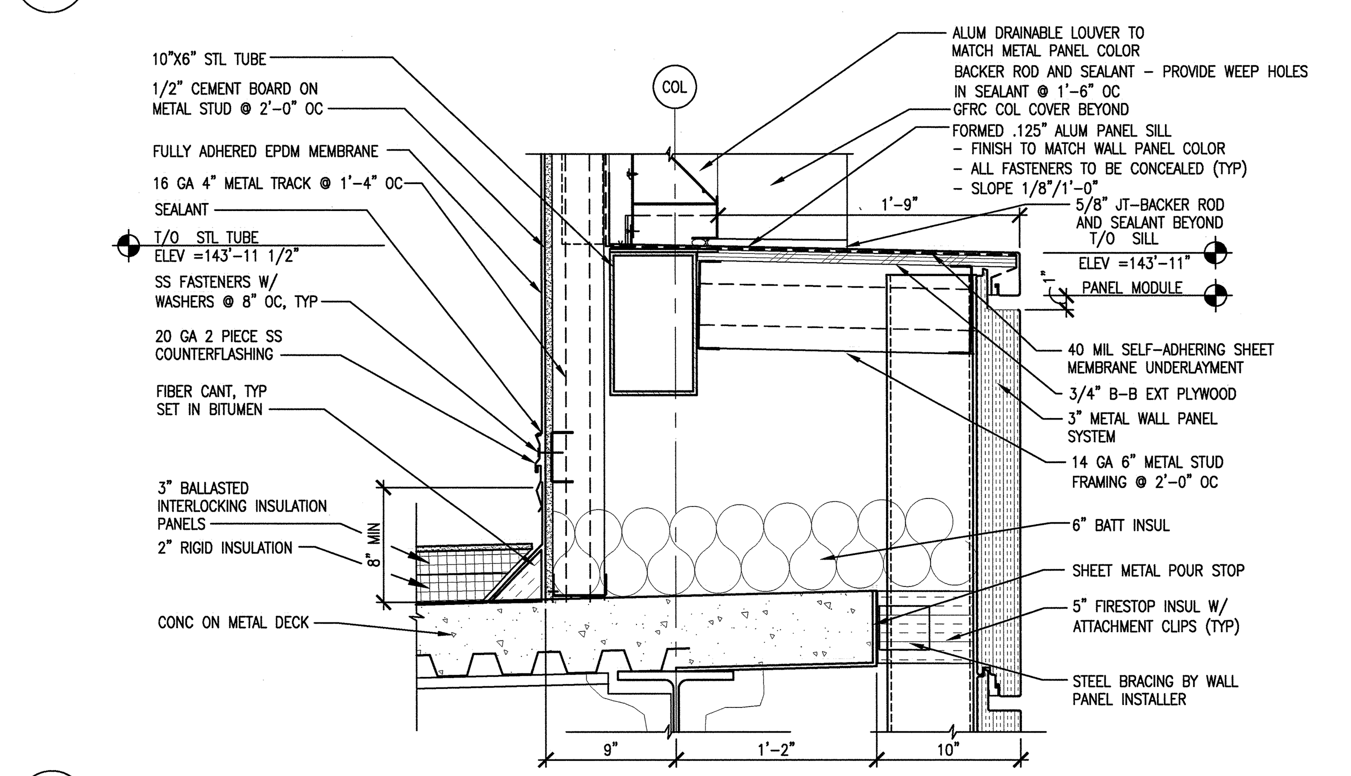

36 DETAIL - LOUVER SILL @ SECTOR 63
A3.30.42 SCALE: 1 1/2"=1'-0" ADT074055-2B

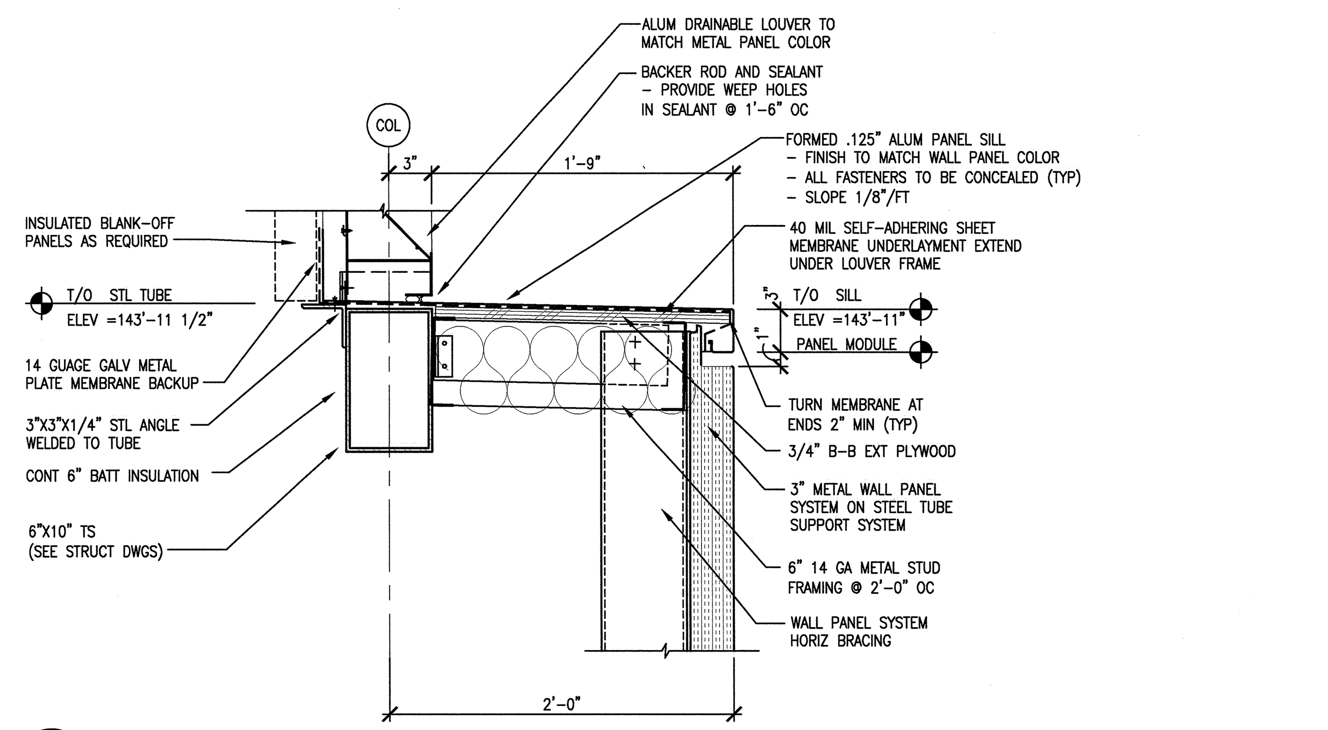

20 DETAIL - LOUVER SILL @ SECTOR 63
A3.30.47 SCALE: 1-1/2"=1'-0" ADT074052-2B

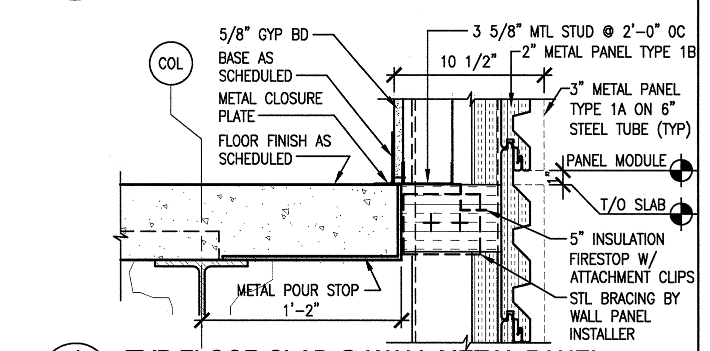

4 TYP FLOOR SLAB @ WALL METAL PANEL
A3.30.44 SCALE: 1-1/2"=1'-0" ADT074023-2B

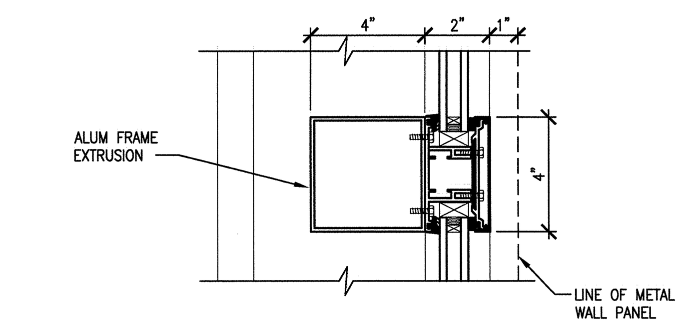

52 DETAIL - STAGGERED VERT WINDOW MULLION
A3.30.41 SCALE: 3"=1'-0" ADT074043-2B

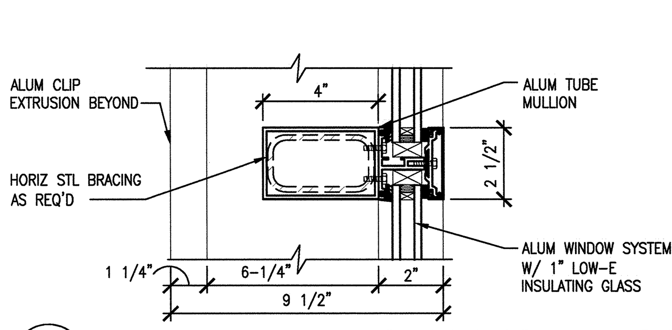

44 DETAIL - WALL PANEL HORIZ. WINDOW MULLION
A3.30.41 SCALE: 3"=1'-0" ADT074040-2B

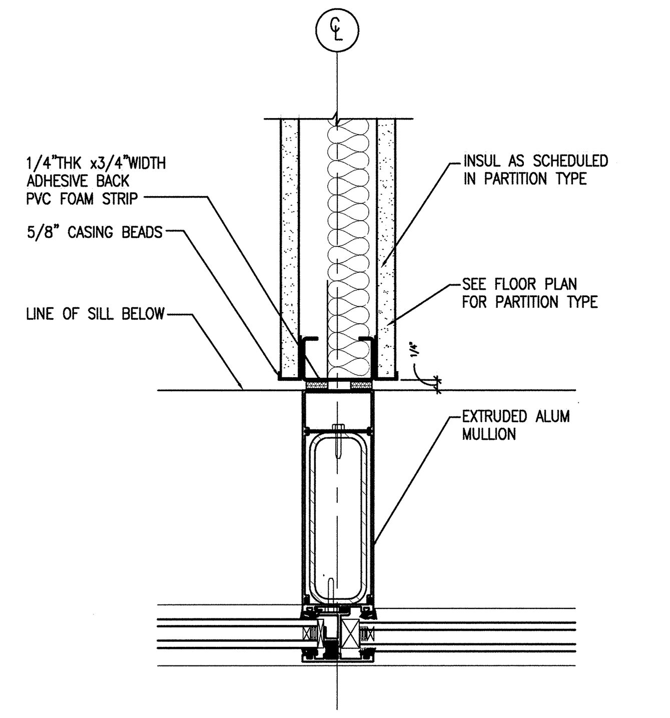

54 DETAIL - PARTITION AT MULLION
A3.30.41 SCALE: 3"=1'-0" ADT077038-2B

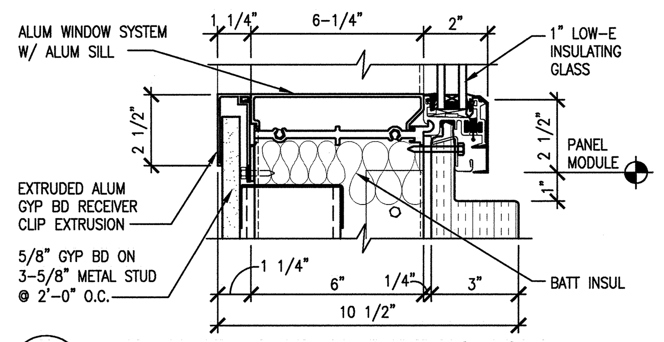

45 WALL PANEL TYPE 1A @ WINDOW SILL
A3.30.41 SCALE: 3"=1'-0" ADT074044-2B

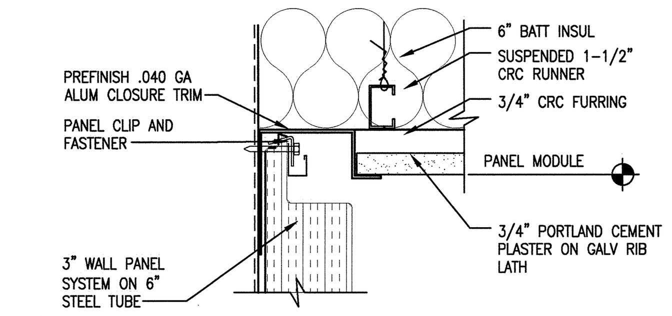

37 DETAIL - PLASTER SOFFIT
A8.20.40 SCALE: 3"=1'-0" ADT074030-2B

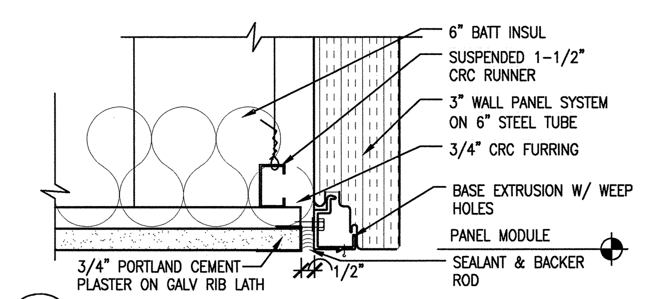

29 DETAIL - PLASTER SOFFIT
A8.20.40 SCALE: 3"=1'-0" ADT074031-2B

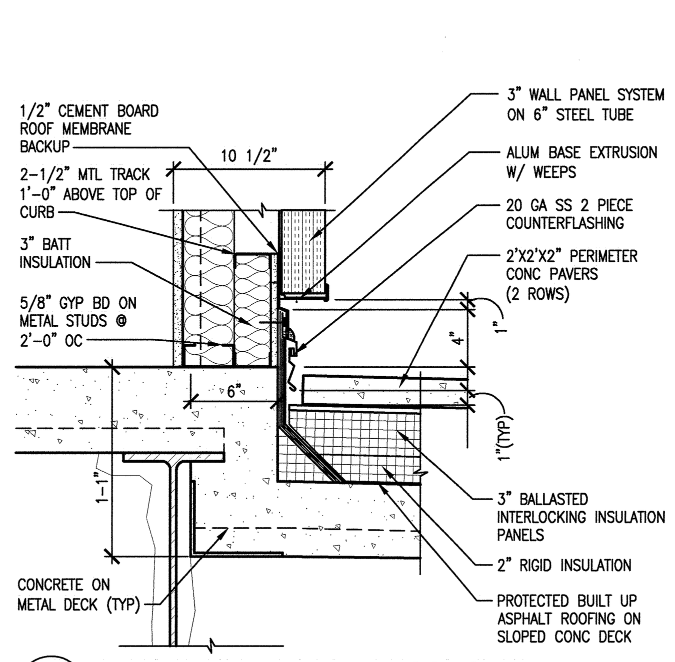

22 WALL PANEL DETAIL AT ROOF SLAB
A3.30.41 SCALE: 1-1/2"=1'-0" ADT074026-2B

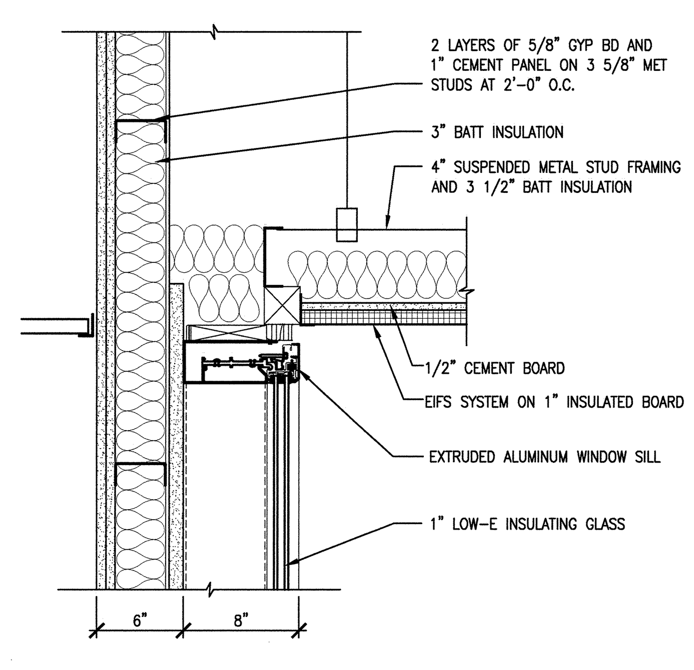

13 WALL PANEL DETAIL @ EIFS SOFFIT
A3.30.40 SCALE: 1-1/2"=1'-0" ADT074028-2B

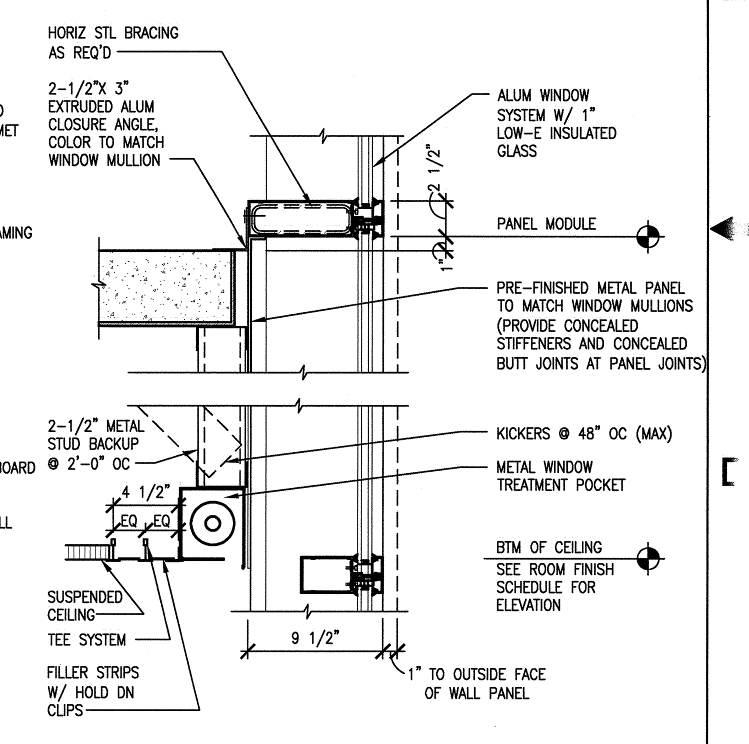

6 DETAIL - CLOSURE PANEL @ CORRIDOR
A3.30.45 SCALE: 1-1/2"=1'-0" ADT034019-2B

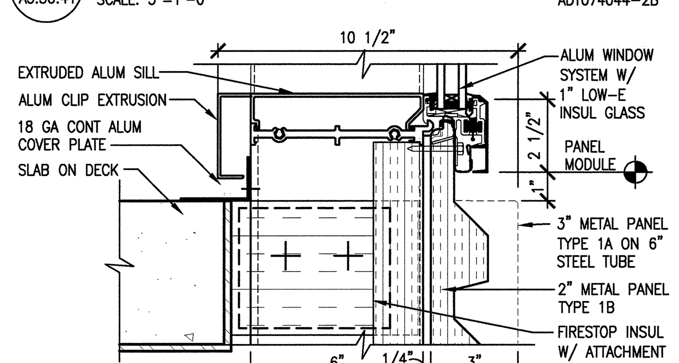

46 DETAIL - WALL PANEL @ FLOOR SLAB
A3.30.44 SCALE: 3"=1'-0" ADT074042-2B

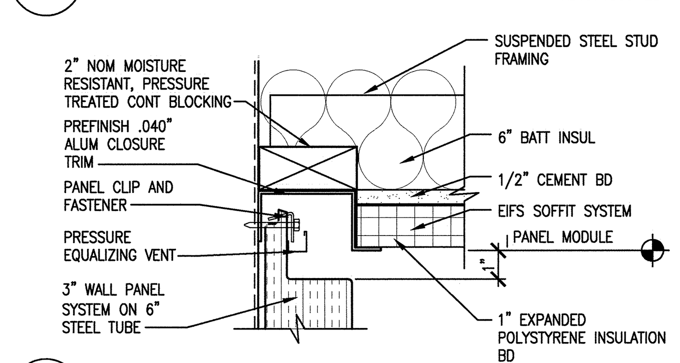

38 DETAIL - EIFS SOFFIT
A3.30.40 SCALE: 3"=1'-0" ADT074032-2B

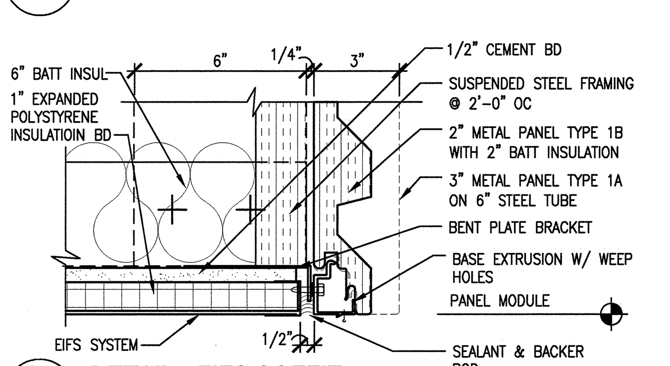

30 DETAIL - EIFS SOFFIT
A3.30.47 SCALE: 3"=1'-0" ADT074033-2B

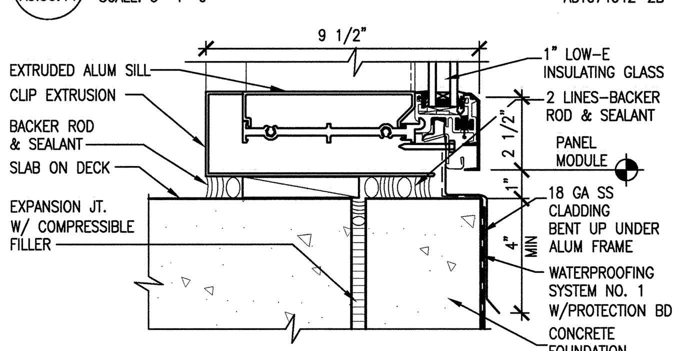

47 DETAIL - WALL PANEL WINDOW @ FLOOR SLAB
A3.30.47 SCALE: 3"=1'-0" ADT074046-2B

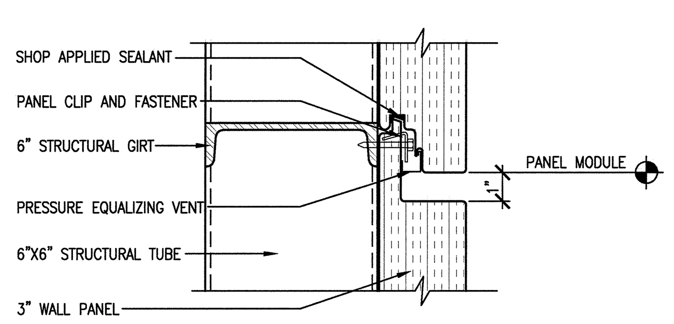

39 TYP. HORIZONTAL JOINT @ MTL PNL TYPE 1A
A3.30.41 SCALE: 3"=1'-0" ADT074029-2B

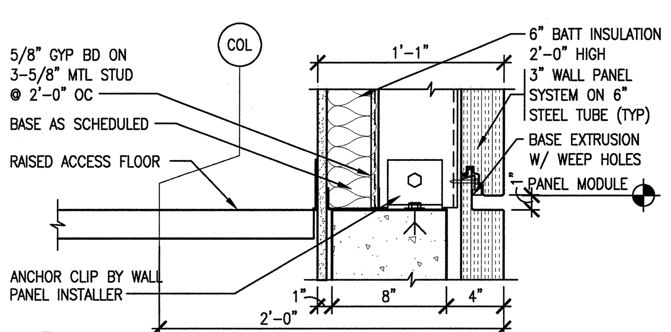

31 DETAIL - WALL PANEL @ FOUNDATION WALL
A3.40.41 SCALE: 1-1/2"=1'-0" ADT074064-2B

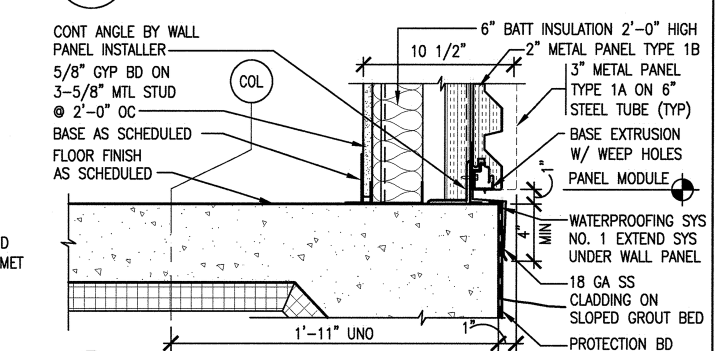

7 WALL METAL PANEL @ FLOOR SLAB
A3.30.42 SCALE: 1-1/2"=1'-0" ADT074024-2B

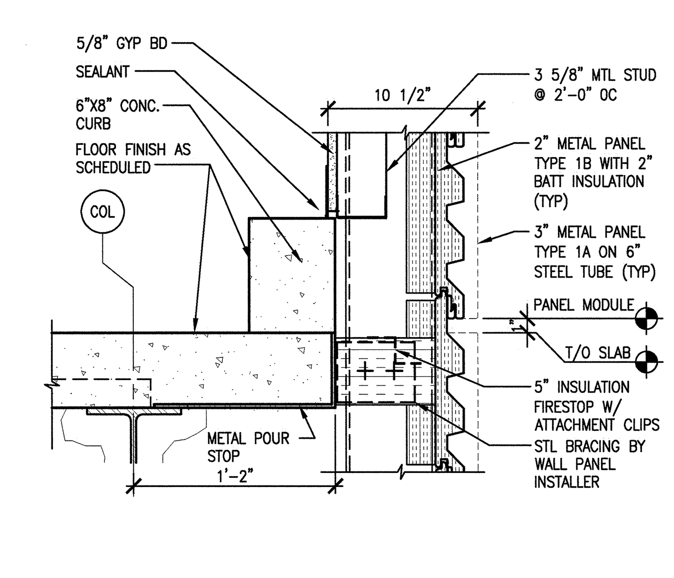

56 DETAIL- CURB @ MECHANICAL ROOM
A3.30.44 SCALE: 1-1/2"=1'-0" ADT074092-2B

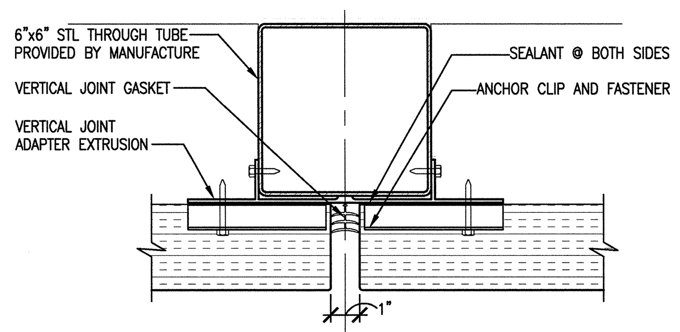

40 TYP. VERTICAL JOINT @ METAL PANEL TYPE 1A
A3.30.41 SCALE: 3"=1'-0" ADT074027-2B

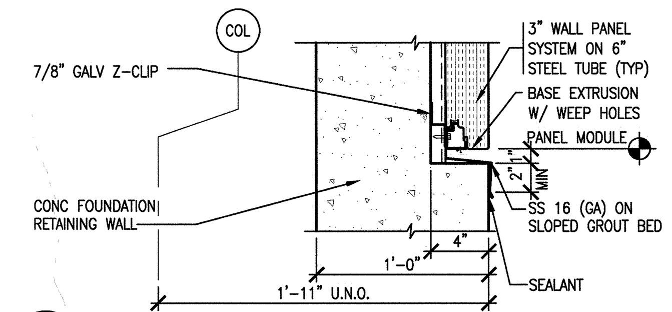

32 DETAIL - WALL PANEL @ FOUNDATION WALL
A3.40.41 SCALE: 1-1/2"=1'-0" ADT074065-2B

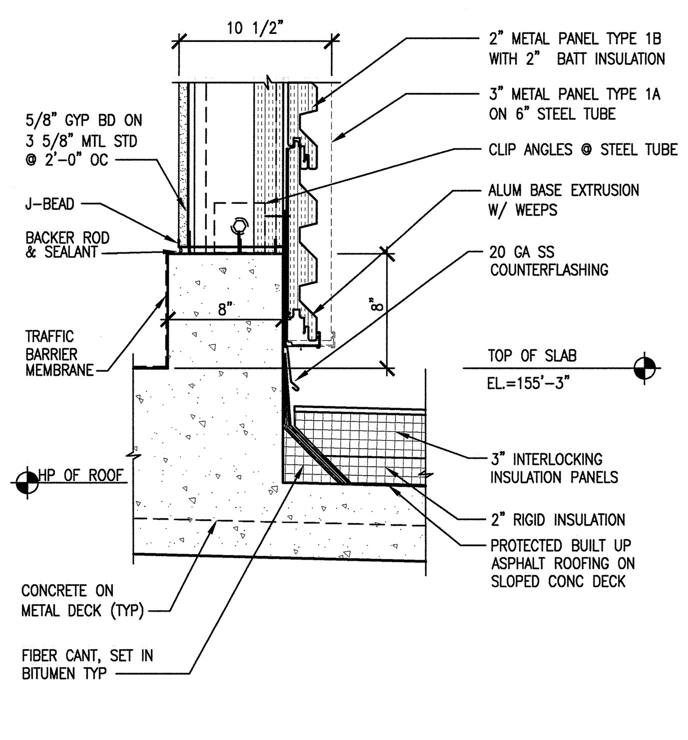

24 DETAIL - CURB AT BOILER ROOM
A3.30.43 SCALE: 1-1/2"=1'-0" ADT074068-2B

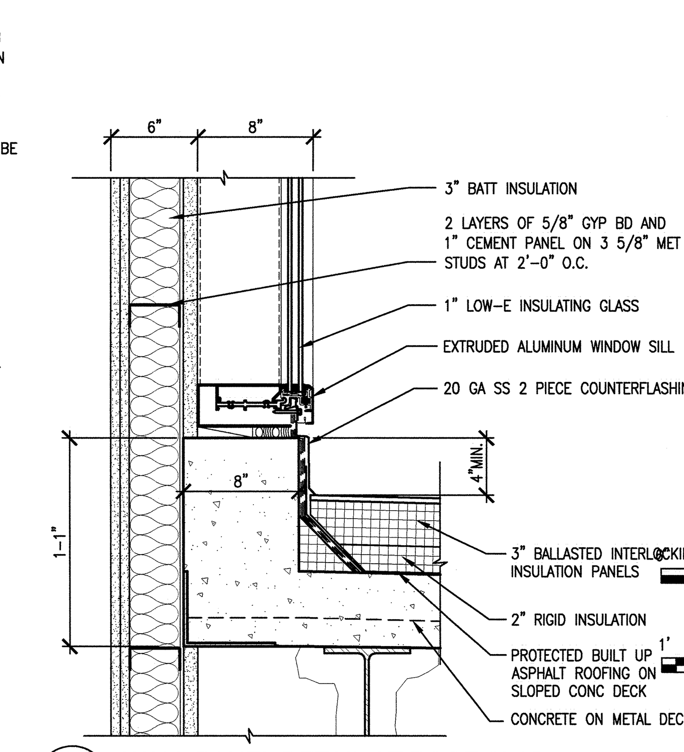

14 WALL PANEL DETAIL AT ROOF SLAB
A3.30.40 SCALE: 1-1/2"=1'-0" ADT074028-2B

SCALE: 3" = 1'-0"

SCALE: 1-1/2" = 1'-0"

108031400-A8E-8600-A133

Knight/Jacobs Joint Venture
701 Scarboro Road, MS 8253
Oak Ridge, TN 37830
865-241-9433
fax 865-241-3400

KNIGHT
Knight Advanced Technology
549 West Randolph Street
Chicago, IL 60661

UT-BATTELLE
Oak Ridge National Laboratory
managed for the DEPARTMENT OF ENERGY under U.S. GOVERNMENT contract DE-AC05-00OR22725
UT-BATTELLE, LLC, © Oak Ridge, Tennessee

PROJECT NAME:
SPALLATION NEUTRON SOURCE

CENTRAL LAB AND OFFICE BUILDING EXTERIOR ENCLOSURE DETAILS

RPE		
DSN	H. BAUMAN	5/15/01
DRW	R. WEINMANN	5/15/01
CHK	E. DENSON	5/15/01
DEPT		
PE	C.L. GARREN	9/6/01
PJ	J. STELLERN	8/21/01
REQ		
UTB	J.R. LAWSON	9/25/01

ROBERT L. BARNES REGISTERED ARCHITECT NO. 102104 STATE OF TENNESSEE 18/12/01.

REV. DATE DRAWING APPROVALS

1	48	49	50	PLANT	BLDG	FL	SH.	OF	TYPE	CLASS
3	A	X	X	8	8600		1	1	S	U
51	52		53		WBS					REV
NC	NA				1.8.3.14	A8.20.40				1

REV	CHANGE TYPE	CHANGE CONTROL SYSTEM	CHANGE REQUEST NUMBER	DESCRIPTION	DSN	CHK	DEPT	DATE	PE	DATE	PJ	DATE	REQ	DATE	UTB	DATE	RPE	RPE NO	DATE
1				CERTIFIED FOR CONSTRUCTION - 12/20/01	CF	ED			PLD	12/01	JJS	12/01			JRL	12/26/01	RLB	102104	12/20/01
0	–	4	–	CERTIFIED FOR CONSTRUCTION - MAY 15, 2001	CF	ED			CLG	9/6/01	JS	8/21/01			JRL	9/25/01	RLB	102104	5/15/01

REVISION OR ISSUE PURPOSE | REVISION APPROVALS

SC	AW	WRS	RL	WRS	BWJ	--	WRS	--	WAS
ST	CV	EC	EE	EM	IE	M	PD	SE	AR

SQUAD CHECK

NO REPRESENTATION OR WARRANTY, EXPRESSED OR IMPLIED, IS MADE AS TO THE ACCURACY, COMPLETENESS OR USEFULNESS OF THE INFORMATION OR STATEMENTS CONTAINED IN THESE DRAWINGS, OR THAT THE USE OR DISCLOSURE OF ANY INFORMATION, APPARATUS, METHOD, OR PROCESS DISCLOSED IN THESE DRAWINGS MAY NOT INFRINGE PRIVATE RIGHTS OF OTHERS. NO LIABILITY IS ASSUMED WITH RESPECT TO THE USE OF, OR FOR DAMAGES RESULTING FROM THE USE OF ANY INFORMATION, APPARATUS, METHOD, OR PROCESS DISCLOSED IN THESE DRAWINGS. DRAWINGS MADE AVAILABLE FOR INFORMATION TO BIDDER ARE NOT TO BE USED FOR OTHER PURPOSES AND ARE TO BE RETURNED UPON REQUEST OF THE FORWARDING CONTRACTOR.

NUMBER OF SECTION OR DETAIL — DRAWING ON WHICH SECTION OR DETAIL IS SHOWN OR TAKEN
SECTION AND DETAIL KEY

THIS DOCUMENT CONTROLLED BY
CHANGE CONTROL SYSTEM 4
ENGINEERING PROCEDURE SNS-ENG-G001

AutoCAD

Date: 12/17/2001 Time: 20:28:41
Username: SICILIAMS
CHI-F_VOL2:PROJECTS\7000\700_CADD\TASK_2B\740_PLOT\A8-20-40.DWG

8 | 7 | 6 | 5 | 4 | 3 | 2 | 1